OWNER'S MANUAL

HOWL® CAMPFIRES

R4 MKii™ PORTABLE FIRE PIT

(MODEL - HCR4MKii)

GAS-FIRED

C UL US

LISTED

MH66274
Outdoor Fireplace

DANGER: FIRE OR EXPLOSION HAZARD

If you smell gas:

- **Shut off gas to the campfire**
- **Extinguish any open flame**
- **If odor continues, leave the area immediately**
- **After leaving the area, call your gas supplier or fire department**

Failure to follow these instructions could result in fire or explosion that could cause property damage, bodily injury, or death.

DANGER: FOR OUTDOOR USE ONLY, CARBON MONOXIDE HAZARD

This campfire can produce carbon monoxide which has no odor. Using it in an enclosed space can kill you. Never use it in an enclosed space such as a camper, vehicle, tent, under an awning or other cover, or in a home or building.

WARNING: KEEP FUELS AWAY FROM CAMPFIRE

Do not store or use gasoline, or any other flammable vapors or liquids, in the vicinity of this or any other heat source. Do not store a Liquid Propane (LP) tank that is not connected for use anywhere near this or any other heat source. Failure to comply may result in fire or explosion causing property damage, bodily injury, or death.

WARNING: FOR OUTDOOR USE ONLY

Installation and service must be performed by a qualified installer, service agency, or gas supplier.
INSTALLER: Leave this manual with the appliance
CONSUMER: Retain this manual for future reference

DANGER:

Improper installation, adjustment, alteration, service, or maintenance can cause property damage, injury, or death. Read and understand all installation, operating, and maintenance instructions thoroughly before installing or servicing this equipment.

WARNING: FOLLOW INSTRUCTIONS

If the information in this manual is not followed, a fire or explosion may result, causing property damage, bodily injury, or death.

WARNING: USE ONLY LIQUID PROPANE

This campfire is to be used with liquid propane gas only (sold separately). Do not attach a remote gas supply to this campfire. Failure to comply may result in fire or explosion causing property damage, bodily injury, or death.

WARNING: USE NO SOLID FUELS

Do not attempt to use solid fuels such as wood or charcoal with this appliance. Failure to comply may result in fire or explosion causing property damage, bodily injury, or death.

WARNING: KEEP FLAMMABLE OBJECTS AWAY FROM CAMPFIRE

This campfire uses infrared radiation to warm people and objects. Close proximity or prolonged exposure, even without direct contact with the campfire or its surfaces, may result in severe burns to skin or ignition of flammable objects including but not limited to: clothing, paper, wood, and foliage.

WARNING: DO NOT USE FOR COOKING

This campfire is NOT designed for cooking or heating cookware, food, or liquids. Failure to comply may result in fire or explosion causing property damage, bodily injury, or death.

WARNING: KEEP DISTANCE WHEN IGNITING

When igniting this campfire, stay away from the burners as flames will leap up and may cause injury.

WARNING: QUALIFIED SERVICE ONLY

Installation and repair should be done by a qualified service person. The appliance should be inspected before use and at least annually by a qualified service person. More frequent cleaning may be required as necessary. It is imperative that the control compartment, burners, and circulating air passageways of the appliance are kept clean.

Hazard Notices Used in this Manual

This appliance poses potential hazards during installation, operation, and service. In this manual you will find four levels of safety precautions and important notices that conform to ANSI Z535 and ISO 3864. These hazard notices identify the hazard, explain how to avoid the hazard, and how to identify probable consequences of not avoiding the hazard. These notations are provided primarily in the procedural section and are intended to complement the ANSI and/or ISO safety labels physically located on the appliance.

DANGER	**Avoid hazard.** Danger notifications indicate a hazardous situation which, if not avoided **WILL** result in serious injury or death. The hazard is imminent.
WARNING	**Avoid hazard.** Warning notifications indicate a hazardous situation which, if not avoided **COULD** result in serious injury or death. The hazard is possible.
CAUTION	**Avoid hazard.** Caution notifications indicate a hazardous situation which, if not avoided **COULD** result in a moderate or minor injury and/or damage to the appliance.
Symbols on Appliance	General warning, refer to manual for further instructions. ISO 7010, W001. Warning, hot surface. ISO 7010, W0017

TABLE OF CONTENTS

Section ONE: WARNINGS AND SAFETY INFORMATION

1.1 **WARNING:** READ AND FOLLOW ALL DIRECTIONS CAREFULLY
1.2 **DANGER:** FIRE OR EXPLOSION HAZARD
1.3 **DANGER:** CARBON MONOXIDE HAZARD
1.4 **DANGER:** PERSONAL SAFETY
1.5 **WARNING:** DO NOT MISUSE THIS APPLIANCE
1.6 **WARNING:** PRODUCT INSPECTION, SETUP AND MAINTENANCE
1.7 **WARNING:** LP TANK SELECTION BEFORE SETUP
1.8 **WARNING:** LOCATION AND OPERATION SAFETY
1.9 **WARNING:** STORAGE SAFETY
1.10 **DANGER:** TRANSPORTATION SAFETY

Section TWO: HOWL R4MKii COMPONENTS

Section THREE: HOWL R4MKii SETUP AND USE

STEP 1: Where to Locate the HOWL R4 MKii for Use
STEP 2: How to Attach the Quick-Connect Hose
STEP 3: How to Connect and Where to Place the Liquid Propane (LP) Tank
STEP 4: How to Check for Leaks
STEP 5: How to Light and Adjust the A-Flame Burner
STEP 6: How to Light BarCoal Burner
STEP 7: How to Extinguish and Disconnect the HOWL R4MKii
STEP 8: How to Configure and Secure for Transport and Storage
STEP 9: Troubleshooting

Section FOUR: LIMITED WARRANTY AND PERFORMANCE PROMISE

Section FIVE: HOWL CAMPFIRE RESOURCES AND DOCUMENTATION

5.1 TECHNICAL SUPPORT
5.2 ONLINE MANUAL

Section ONE. WARNINGS AND SAFETY INFORMATION

1.1 WARNING: READ AND FOLLOW ALL DIRECTIONS CAREFULLY

If the information in this manual is not followed, fire or explosion may result, causing property damage, bodily injury, or death. Read this manual thoroughly before setting up or using this campfire. Retain this manual with the product for reference.

1.2 DANGER: FIRE OR EXPLOSION HAZARD

If you smell gas:

- Shut off gas to the appliance
- Extinguish any open flame
- If the odor continues, leave the area
- After leaving the area immediately call your gas supplier or fire department

Do not store or use gasoline or other liquids with flammable vapors in the vicinity or this or any other appliance.

An LP tank not connected for use shall not be stored in the vicinity of this or any other appliance.

Do not store LP tank in vehicle. Tank can leak gas.

Do not place LP tank in hot vehicle. Tank overpressure valve can leak gas.

Failure to follow these instructions could result in fire or explosion, which could cause property damage, personal injury, or death.

INSTALLER: Leave this manual with the appliance
CONSUMER: Retain this manual for future reference

1.3 DANGER: CARBON MONOXIDE HAZARD

FOR OUTDOOR USE ONLY

- This campfire can produce carbon monoxide (CO) which has no odor
- Using it in an enclosed space **can kill you**
- CO poisoning produces flu-like symptoms, watery eyes, headaches, dizziness, fatigue, nausea, and possibly death. If these symptoms are present during the operation of this campfire, get fresh air immediately!
- Never use campfire inside enclosed spaces such as camper, vehicle, tent, home, or covered area
- Do not block airflow into or out of the campfire, as this increases the output of CO

1.4 DANGER: PERSONAL SAFETY HAZARD

- Children and adults should be alerted to the hazards of high surface temperatures and should stay away from the campfire to avoid burns or clothing ignition.
- This is not a toy. Keep out of reach of children. Children should never operate this campfire.
- Extreme caution and careful supervision is necessary when any heater, burner, or campfire is used near children, pets, or at-risk individuals.
- Do not sit or rest hands or feet on the HOWL R4 MKii Campfire.
- Never place hands or fingers on any portion of this campfire while in use, except control knobs.
- Do not use the HOWL R4 MKii Campfire when tired or under the influence of alcohol, drugs, or any medication. Any inattentive activity may result in property damage, bodily injury, or death.
- Do not move the campfire while hot. Severe burns can result.
- Do not touch any surfaces until the campfire has cooled.
- Do not wear loose clothing and always wear fully covered shoes while operating the campfire.

1.5 DANGER: DO NOT MISUSE THIS PRODUCT

This product is for OUTDOOR RECREATIONAL USE ONLY. Any misuse could result in fire or explosion causing property damage, bodily injury, or death.

It is impossible to foresee every misuse of this product. If you have any concerns about the use of this product in your environment, contact your local fire safety authority. Additional standards govern the use of fuel gasses and heat-producing products for specific uses. Your local authorities can advise you about these standards.

Some potential misuses include:

- This product is NOT designed for cooking of any kind. Do not use this product for heating foods, cookware, or liquids.
- Do not hang clothing or other flammable materials from the campfire or place them on or near the campfire.
- Do not place any objects inside the burner components of the HOWL R4 MKii Campfire.
- Do not add wood or any other material to the fire. It is designed to safely combust propane only.
- Never leave the campfire unattended when hot or in use. Always use under close supervision.
- Do not obstruct the flow of combustion air and/or ventilation air for the HOWL R4 MKii Campfire. Only use in a well ventilated area. Do not operate in a building, garage or any other enclosed area
- Do not disconnect any part while the HOWL R4 MKii Campfire is in use.
- Do not paint or color any part of this campfire.
- Do not add water into the appliance.
- Do not use this campfire if it has been underwater. Immediately call a qualified service technician to inspect the appliance and replace any part of the control system and any gas control that has been under water.
- Do not store the appliance for long periods outside in rain or snow.

1.6 WARNING: INSPECT, SETUP, AND MAINTAIN PRODUCT PROPERLY

Failure to properly inspect, clean, and maintain the campfire could result in a fire or explosion

causing property damage, bodily injury, or death.
Inspect all elements of this campfire during setup and prior to each use. Do not use the campfire if any parts are damaged. Damaged parts must be replaced only by a qualified service person.

- Inspect the hose and connections prior to setup and each use of the HOWL R4 MKii Campfire.
    - If there is evidence of excessive abrasion or wear, or damage to the hose, the hose assembly must be replaced prior to operating the campfire. Contact HOWL Campfires for service or repairs.
- Inspect burners prior to each use.
    - If there is evidence of damage to the burner it must be replaced prior to operating the campfire. Contact HOWL Campfires for service or repairs.
- Inspect propane tank for damage before attaching.
    - If there is evidence of damage to the tank, it must be replaced. Contact your gas supplier.
- Perform a leak test as described in **Section 3** during setup and prior to each use.
    - If leaks are detected, check that your connections are not cross-threaded and that they are tight, then perform another leak test. If there is still a leak, remove the tank and contact HOWL Campfires for service or repairs.

NEVER ALTER the appliance in any way or install any part not included with your HOWL R4 MKii Campfire or provided by the manufacturer.

- Use only the regulator and connectors that came with your campfire.

Clean your campfire frequently to avoid debris build-up. It is imperative that the control compartment, burners and circulating airways of the appliance are kept clean.

- After the HOWL R4 MKii Campfire has cooled, wipe the frame and burner with a damp cloth to remove combustion particulates.
- To remove carbon build up on your A-flame burner, blow compressed air on it and the carbon should come off. If you have any additional questions about cleaning your Howl please reach out to us at support@howlcampfires.com.
- Do not use solvents or chemical cleaners. Do not immerse the appliance in water.
- Do not use flammable or corrosive cleaning products on or near the HOWL R4 MKii Campfire.
- The HOWL R4 MKii Campfire should be inspected by a qualified service person at least annually.

The installation must conform with local codes, or in the absence of local codes, with the National Fuel Gas Code, ANSI Z223.1, NFPA 54, National Fuel Gas Code, Natural and Propane Installation Code, CSA B149.1 or Storage and Handling Code, or CSA B149.2, as applicable.

The appliance and its individual shutoff valve must be disconnected from the gas supply piping system during any pressure testing of that system at test pressure in excess of ½ psi (3.5kPa

1.7 WARNING: USE ONLY PROPER LP TANK

All Liquid Propane (LP) tanks to be used with this appliance must meet the following criteria. Use of an improper LP tank could result in fire or explosion causing property damage, bodily injury, or death.

Do not store LP tank in vehicle or place LP tank in hot vehicle. LP tank can leak gas.

Discontinue use if any part of the propane tank is damaged. Rust and dents may be hazardous and should be inspected by a gas supplier.

Discontinue use if LP tank does not meet the following specifications. The LP tank used with this

campfire must:

- Be approximately 18” (46 cm) high & 12” (30 cm) in diameter.
- Have a capacity of 20 lbs.
- Be constructed and marked in accordance with the US Department of Transportation (DOT) *Specifications for LP-Gas Cylinders, Spheres and Tubes for Transportation of Dangerous Goods and Commission, CAN/CSA-B339.*
- Not be disposable. Never refill disposable propane tanks.
- Be equipped with a listed overfilling prevention device and a QCC-I or Type I, (CGA 791) LP gas tank connection.
- Be equipped with a collar to protect the gas valve.
- Not be filled more than 80 percent full.
- Be transported in the upright position, with a stabilizer that prevents the LP gas tank from tipping over.

LP tank pressure requirements:

- Minimum Supply Pressure 5 PSI
- Maximum Supply Pressure 200 PSI

1.8 WARNING: LOCATE CAMPFIRE PROPERLY

The campfire must be set up in a safe location:

- **FOR OUTDOOR USE ONLY**. **Do not use inside any RV, vehicle, in any home, building, enclosure, tent, awning, or under any other structure.**
- Do not operate the HOWL R4 MKii Campfire in areas where the surroundings include combustible materials including but not limited to: paper or cardboard, leaves, grasses, woods, volatile or airborne combustibles such as gasoline, flammable liquids, explosive powders, solvents, paint thinner, dust, or unknown chemicals. Flames and IR heat that occur during campfire operation may ignite these materials causing a fire or explosion.
- Do not locate the HOWL R4 MKii Campfire on a table, or on/near plastic or artificial decking or furnishings. These can melt or be damaged.
- The HOWL R4 MKii Campfire should be placed on level ground out of traffic areas where it will not be tipped over.
- Keep fuel supply hose out of pathways to avoid tripping hazard and accidental injury.
- Keep fuel supply hose away from heated surfaces.
- Do not connect to a remote gas supply.
- Use only approved LP tanks (**see Section 1.7**)

1.9 WARNING: STORE CAMPFIRE AND TANK PROPERLY

Improper storage of the HOWL R4 MKii Campfire or LP tank could result in a fire or explosion causing property damage, bodily injury, or death.

- If the HOWL R4 MKii Campfire is stored indoors, detach the propane tank and leave outdoors.
- Do not store any LP tank connected to a hose or to this appliance.
- Do not store any LP tank or other fuel source on or near this campfire.
- Only store LP tank according to manufacturer’s or gas supplier’s instructions.
- Do not store LP tank indoors or in a vehicle. Only store the tank outdoors.

1.10 DANGER: TRANSPORT CAMPFIRE AND TANK PROPERLY

Improperly transporting propane gas is dangerous and can result in fire or explosion causing property damage, personal injury, or death. Before transporting LP tank, make sure to follow all tank manufacturer and gas supplier instructions, in addition to the following:

- Ensure LP tank valve is rotated fully clockwise to the “OFF” position.
- Ensure regulator hose is disconnected from the LP tank.
- Ensure tank is transported in an upright position, and cannot tip over.

You may be able to use the HOWL R4 MKii Campfire as a stabilizing stand for transportation. Follow all instructions in Section 3.

Section TWO: HOWL R4 MKii CAMPFIRE™ COMPONENTS

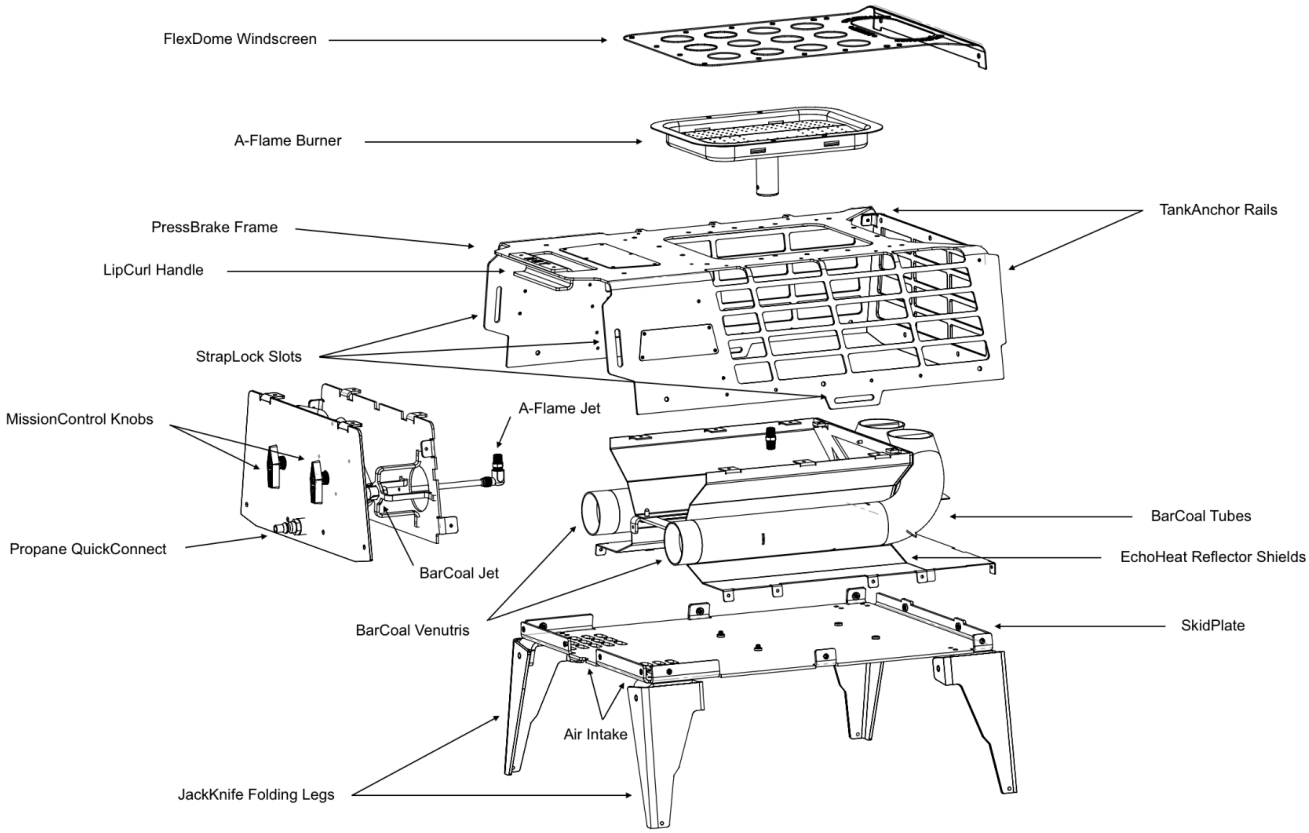

PRODUCT DIMENSIONS:

- Assembled, Legs extended: 21 x 14.38 x 12.75 in | 53.34 x 36.52 x 32.39 cm
- Assembled, Legs collapsed: 21 x 14.34 x 7.53 in | 53.34 x 36.42 x 19.13 cm
- Weight: 27.0 lbs. | 12.25 kg
- Hose Compatibility: Inlet, QCC – Type 1 | Outlet, Quick Connect

Section THREE: HOWL R4 MKii CAMPFIRE SETUP AND USE

CAUTION: Setup must conform to local codes. If you do not know your local codes, consult with your local fire department or gas servicer or supplier.

WARNING Failure to follow these instructions could result in property damage, bodily injury, or death.

Additional Use Warning: Items placed under or around the HOWL R4 MKii Campfire during use will be subjected to radiant heat and could be damaged.

STEP 1: Place the HOWL R4 MKii Campfire and LP Tank

DANGER: **FOR OUTDOOR USE ONLY**. Do not use inside any RV, vehicle, home, building, garage, enclosure, tent, awning, or under any other structure

WARNING Do not use on uneven ground or in high-traffic areas where the HOWL Campfire could tip over or present a tripping hazard. Tipping over the HOWL Campfire while in use could result in a fire or explosion causing property damage, bodily injury, or death.

Before Setup

1. Place the HOWL R4 MKii Campfire in the spot where you will use it. Unfold the JackKife Folding Legs into the fully extended position. The campfire must be placed on flat, level ground 10 feet away from any flammable object.
2. Place the LP tank on the orange control panel side of the HOWL Campfire, a minimum of 5 feet from the appliance, where it will not be tipped over.
3. Ensure the gas hose is not in a pathway where it will present a tripping hazard or be subject to damage.
4. Ensure the gas hose is not touching any part of the HOWL Campfire housing.
5. **The minimum clearance from the sides and back of the HOWL R4 MKii Campfire to any material is 5 feet and from the top is 10 feet. Do not use it under any overhead structure.**

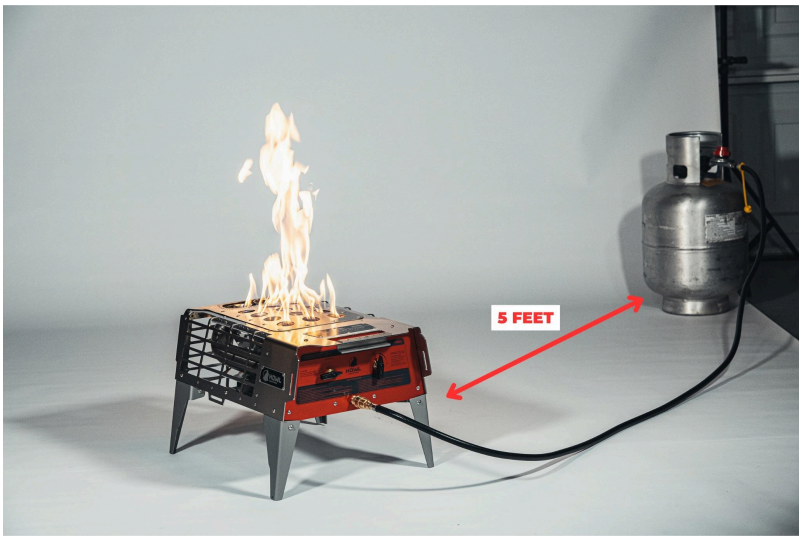

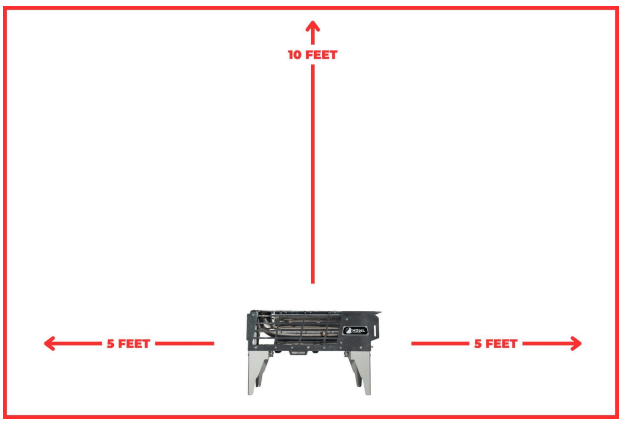

STEP 2: Attach Hose to Campfire

1. Ensure the A-Flame and BarCoal Control Knobs are turned to the OFF position.
2. Find the QuickConnect Stem near the bottom of the orange Control Panel. Make sure the attachment is clear of debris.
3. Find the Quick-Connect Spring Collar on the end of the regulator hose. Make sure the attachment is clear of debris.
4. Pull back the Quick-Connect Spring Collar and push it onto the Quick-Connect Stem until there is a secure attachment.

STEP 3: Connect the LP Tank

WARNING:	Ensure that the LP tank meets the specifications in Section 1.7.
WARNING:	Ensure that the LP tank is kept at a minimum distance of 6 feet (2m) away from the HOWL Campfire
WARNING	Failure to position the parts in accordance with these diagrams or failure to use only parts specifically approved with this appliance may result in property damage or personal injury.

1. Check to make sure the valve knob on the LP tank is turned fully clockwise to the CLOSED position.
2. If present, remove the protective cap from the LP tank valve and coupling nut.
3. Inspect the hose before each use of the HOWL Campfire. Make sure connections are clear of debris.
4. Turn the A-Flame and BarCoal Control Knobs on the HOWL Campfire to the OFF position.
5. Hold the regulator hose in one hand and tighten the coupling nut onto the LP tank by turning it clockwise until it comes to a full stop. Firmly tighten by hand only. Do not overtighten.

STEP 4: Check for Leaks

DANGER:	Never use a flame to check for gas leaks. Doing so could result in a fire or explosion causing property damage, personal injury, or death
DANGER:	Do not use the fire pit until all leaks are corrected. Doing so could result in a fire or explosion causing property damage, personal injury, or death.
WARNING:	You must check for leaks upon first time use, after long periods of disuse, after any incidents which could cause damage, and at least once a year.
WARNING:	Failure to check for and repair leaks could result in a fire or explosion causing property damage, personal injury, or death.

1. Make sure BarCoal and A-Flame knobs are in “OFF” position.
2. Remove the Skid Plate (bottom panel):
    a. unscrew the six (6) fasteners that connect the Skid Plate to the Press Brake Frame
3. Prepare a 50/50 solution of dish soap and water in a spray bottle.
4. Apply leak check solution to all gas-carrying connections and fittings along hose from tank to device, and inside control panel.
5. Turn the tank valve to Open and turn the adjustable regulator (red knob) to On. The presence of bubbles at areas of wet solution indicate a gas leak. If leaks are detected or you smell or hear gas, shut off the tank valve immediately.
6. Check that your connections are not cross-threaded and that they are tight. Perform another leak test. If there is still a leak, remove the tank and contact HOWL Campfires for service or repairs.
7. Do not use the HOWL R4 MKii Campfire until all leaks are professionally repaired, or the defective part has been replaced by the Howl Campfires service team.
8. Once no leaks are detected, replace Skid Plate and fasteners.

STEP 5: Light the A-Flame Burner

WARNING: Keep hands and face away from the burner when lighting as the flame will light up and may cause injury

WARNING: DO NOT TOUCH main frame of HOWL Campfire once lit. Top and sides will get VERY VERY HOT. Touch only the control knobs. Do not attempt to move or re-position the campfire until it cools completely. Serious injury could result

CAUTION: The burner must be inspected before each use of the appliance. If it is evident that the burner is damaged it must be replaced before the appliance is put into use.The burner must be replaced only by factory-authorized parts as specified by the manufacturer.

1. With Campfire properly connected, turn LP tank valve knob to OPEN (COUNTER-CLOCKWISE, approx. 2.5 rotations) and turn red pressure knob on hose to OPEN (CLOCKWISE, 3 rotations)
2. Place tip of elongated (BBQ Style) lighter in the corner hole nearest to you on top of the unit. Ignite lighter.
3. Turn knob labeled “A-FLAME” to ON position.

WARNING: If unit does not ignite within 10 seconds, turn red pressure knob on hose to CLOSED (COUNTER-CLOCKWISE) and wait 5 minutes. Then repeat from Step 5.1.

STEP 6: Light the BarCoal Burner

WARNING: Keep hands and face away from the BarCoal exhaust when lighting, as the flame and hot exhaust may light up and may cause injury.

WARNING: DO NOT TOUCH main frame of HOWL Campfire once lit. Top and sides will get VERY VERY HOT. Touch only the control knobs. Do not attempt to move or re-position the campfire until it cools completely. Serious injury could result

CAUTION: The burner must be inspected before each use of the appliance. If it is evident that the burner is damaged it must be replaced before the campfire is put into use.The burner must be replaced only by factory-authorized parts as specified by the manufacturer.

1. With A-Flame burner lit and operating, place the tip of elongated (BBQ Style) lighter between BarCoal exhaust ports and ignite lighter.
2. Turn the knob labeled “BARCOAL” to ON

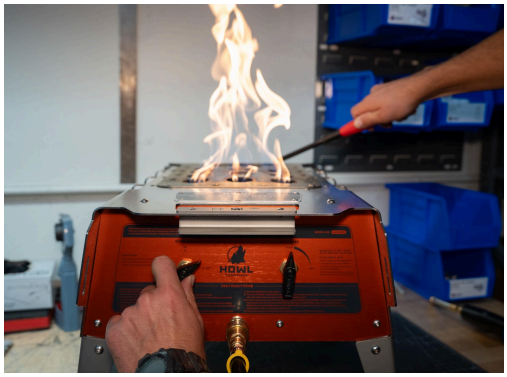

If desired, you may turn either A-FLAME or BARCOAL knob to OFF to use one burner independently. To reignite the burner that is off, you must turn both burner knobs to OFF, then repeat from Step 5.1.

NOTE: The A-Flame and BarCoal burners have been engineered to provide maximum heat and comfort. If you experience any signs of the propane tank ‘freezing off’ or start to experience lower flames and heat than usual, reduce propane usage rate by turning one of the burners off, or by turning the adjustable regulator down for 5-10 minutes. This will allow the tank to warm back up.

If your tank is low, you will need to shut the campfire off and refill the tank, or replace with a full tank.

STEP 7: Extinguish and Disconnect the campfire

WARNING: DO NOT TOUCH main frame of HOWL Campfire once lit. Top and sides will get VERY VERY HOT. Touch only the control knobs. Do not attempt to move or re-position the campfire until it cools completely. Serious injury could result

1. Turn the A-Flame Control Knob to the OFF position. The flame will diminish and then extinguish.
2. Turn the BarCoal Control Knob to the OFF position. The BarCoal device will fall silent, indicating it is no longer burning.
3. After both burners are extinguished, rotate the valve on LP tank clockwise to fully CLOSED position.
4. Wait until the HOWL Campfire frame is completely cool before handling, approximately 45 minutes.
5. Once all parts of the HOWL Campfire are completely cool, tip the product up on the TankAnchor Rails with the Control Panel facing up.

6. Pull back the Spring Collar of the Quick-Connect Socket and slide off of the Quick-Connect Stem to detach the regulator hose from the HOWL Campfire.
7. Fold the legs into the fully closed position so they are resting against the bottom panel.
8. Disconnect the Regulator Hose from the LP tank.

STEP 8: Transport and Store the campfire

DANGER: **Improper transport and handling of propane gas is highly dangerous and can result in a fire or explosion causing property damage, bodily injury, or death.**

WARNING: Always transport LP tank according to manufacturer's specifications.

WARNING: Always keep the valve up, and stabilize the tank so that it does not tip over. If tank tips over while driving, immediately stop the vehicle, place the tank right side up and secure it before moving the vehicle.

WARNING: Never store LP tank inside of a building or structure. Never store LP tank with hose connected to HOWL Campfire. Doing so can result in a fire or explosion causing property damage, bodily injury, or death.

To transport the HOWL Campfire:

1. Ensure HOWL Campfire is cool to the touch before handling.
2. Ensure LP tank valve is turned fully clockwise to the OFF position.
3. Disconnect the fuel hose from the LP tank and coil around top of the LP tank.
4. Place HOWL Campfire in vehicle with TankAnchor Rails down, legs folded in to rest against the bottom panel, and Control Panel facing up.

5. Place the LP tank with valve side up against the SkidPlate of the HOWL Campfire, and use an approved strap to hold the tank to the HOWL Campfire as shown. Tighten strap.
6. Run a tiedown strap through the StrapLock Slots near the ControlPanel, and attach strap ends to the vehicle's factory tie points, per your vehicle's instruction manual.

If you are unable to keep the LP tank secure in your vehicle in the above manner, you must use a different LP tank stabilizing solution.

To store the HOWL R4 MKii Campfire:

1. Store HOWL Campfire in a dry location away from combustible materials.
2. Store all LP tanks outside of any building, in a dry location.

IMPORTANT: FOR ADDITIONAL SAFETY INFORMATION ABOUT INSPECTION, USE, MAINTENANCE, TRANSPORTATION, AND STORAGE OF THE HOWL CAMPFIRE, PLEASE REFER TO SECTION 1 OF THIS MANUAL.

STEP 9: Troubleshooting

PROBLEM: Limited or no gas flow, all burners affected

If both the A-Flame and BarCoal burners are not getting a sufficient flow of fuel, there may be an obstruction in the hose.

1. Disconnect the hose from the HOWL. Inspect both male and female quick connect components for debris. Clear of debris, being careful to NOT push debris into hose or gas lines.
2. Disconnect the hose from LP tank and inspect both hose and tank connections for debris. Clear of debris, being careful to NOT push debris into the hose.
3. Re-test by following steps 1-6 in Section Three above. If fuel does not flow properly, exchange your LP tank. Tank valves can sometimes seize or fail to release fuel, especially on older tanks.
4. If the issue continues to persist, contact support@howlcampfires.com for assistance.

PROBLEM: Limited or no gas flow, only one BarCoal or A-Flame burner affected

If only one burner has an insufficient flow of fuel, there may be an obstruction in the fuel lines. To clear an obstruction in the fuel lines, we recommend a) taking the appliance to a qualified professional propane appliance servicer, or b) returning the appliance to HOWL Campfires, LLC to be repaired at a reasonable cost.

PROBLEM: One side of BarCoal not as hot as other side

If one BarCoal tube is burning much cooler than the other side, there may be an obstruction in the cool side's fuel jet.

1. Remove the SkidPlate (bottom panel) by unscrewing the six (6) fasteners.
2. Use an 11mm torque wrench to unscrew the affected side's BarCoal Fuel Jet.
3. Attach an air compressor to the HOWL quick connect and blow out the system.
4. Clean the BarCoal Fuel Jet and screw it back into the Orifice Holder, to a torque of 8 Newton Meters. DO NOT OVER TORQUE THE JET.

If you are not completely sure of your ability to follow these instructions, we recommend a) taking the Campfire to a qualified professional propane appliance servicer, or b) sending it to HOWL Campfires, LLC, to be repaired at a reasonable cost.

Section 4: LIMITED Warranty and Performance Promise

Your HOWL R4 MKii Campfire was built to keep the forest and the campfire experience alive. It was proudly made in Colorado. HOWL warrants that this product shall be free from defects in workmanship for the life of the product (the "Limited Warranty"). This Limited Warranty does not apply to damage from improper use or normal wear and tear.

If you do manage to damage or wear out a part, please do not put this product in a landfill. Instead, send it back to HOWL, and we will service, repair, and return it to you at a reasonable cost. If the HOWL R4 MKii Campfire is modified or repaired by a third party who is not a qualified service professional, that unit shall not be subject to the Limited Warranty.

DISCLAIMER. EXCEPT FOR THE WARRANTY SET FORTH HERE, HOWL MAKES NO WARRANTY WHATSOEVER WITH RESPECT TO THE GOODS, INCLUDING ANY: (A) WARRANTY OF MERCHANTABILITY; (B) WARRANTY OF FITNESS FOR A PARTICULAR PURPOSE; (C) WARRANTY AS TO THE SAFETY, RELIABILITY, DURABILITY AND PERFORMANCE OF ANY HOWL PRODUCT OR SERVICE, WHETHER EXPRESS OR IMPLIED BY LAW, COURSE OF DEALING, COURSE OF PERFORMANCE, USAGE OF TRADE, OR OTHERWISE. HOWL DOES NOT ACCEPT LIABILITY FOR INCIDENTAL, CONSEQUENTIAL, OR INDIRECT DAMAGES, OR FOR ANY THIRD PARTY CLAIMS FOR DAMAGES.

In purchasing and using the HOWL R4 MKii Campfire, you understand that use entails inherent risks of physical injury, including, but not limited to, the risks described in this Owner's Manual. Prior to use or transportation, you agree to read all warnings contained in this Owner's Manual and are fully aware of the risks and hazards associated with use of the HOWL R4 MKii Campfire, and hereby elect to voluntarily use the HOWL R4 MKii Campfire. You voluntarily assume full responsibility for any risks of loss, property damage, or personal injury, including death, that may be sustained as a result of use of the HOWL R4 MKii Campfire, unless caused by the gross negligence or willful misconduct of HOWL.

Section 5. RESOURCES AND DOCUMENTATION

5.1 Technical Support and Customer Service

Email support@howlcampfires.com any time
Call 720-295-9708 M-F 9a - 5p Mountain Time

5.2 Online Manual

Manuals and product updates may be downloaded at HOWLcampfires.com.

5.3 Testing Agency and Certification

This campfire was tested and certified by Underwriters Laboratories (UL). It meets or exceeds all safety requirements of the ANSI Z21.97-2017/CSA 2.41-2017 Standards for Outdoor Decorative Gas Appliances. For inquiries regarding certification, please contact:

UL Solutions Headquarters
333 Pfingsten Road
Northbrook
Illinois, 60062

5.4 Replacement Parts

The QuickConnect Regulator Hose can be purchased at howlcampfires.com. For all other service or replacement part inquiries, please contact Customer Service.