BUILT-IN SERIES

Owner's Manual

BI 32, BI12 & BI10,

BIG32-1, BIG38-1 & BIG44-1,

BIB10, BIB12 & BIB18.

Grills illustrated in this manual may differ from model purchased.

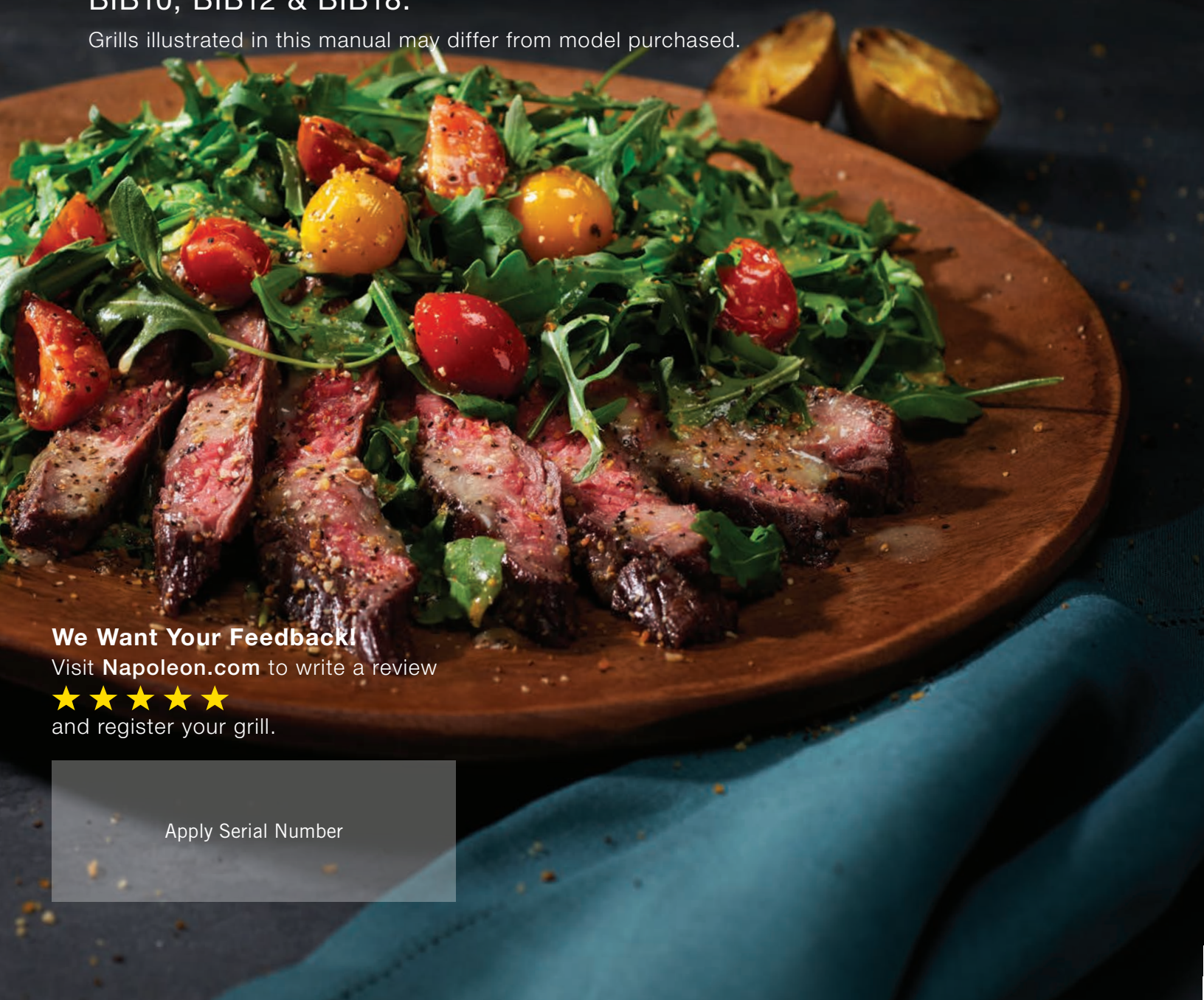

We Want Your Feedback!

Visit **Napoleon.com** to write a review

★★★★★

and register your grill.

Apply Serial Number



CONGRATULATIONS ON YOUR NAPOLEON GRILL!

You've Just Upgraded Your Grilling Game.

WE WANT YOUR GRILLING EXPERIENCE TO BE MEMORABLE AND SAFE.

Please read and follow this Owner's Manual before using your grill to avoid property damage, personal injury, or death.

Remove all packaging material, promotional labels and cards from the grill before use.

USE OUTDOORS IN A WELL-VENTILATED SPACE.

DO NOT OPERATE IN A BUILDING, GARAGE, OR ANY OTHER ENCLOSED AREA.

DANGER!

IF YOU SMELL GAS:

- Shut off gas to the appliance
- Extinguish any open flame
- Open lid
- If odor continues, keep away from the appliance and immediately call your gas supplier, or fire department.

WARNING!

Do not try to light this appliance without reading the "LIGHTING" instructions section of this manual.

Do not store or use gasoline, or other flammable liquids or vapors in the vicinity of this or any other appliance.

An L.P. (propane) cylinder not connected for use must not be stored in the vicinity of this or any other appliance.

If the information in these instructions is not followed exactly, a fire or explosion may result and cause property damage, personal injury, or death.

Alert adults and children about the hazard of hot surface temperatures. Supervise young children near the grill.

NOTICE TO INSTALLER: Leave these instructions with the grill owner for future reference.
NOTICE TO CONSUMER: Keep these instructions for future reference.

Welcome to Napoleon!

Safety First

WARNING General Information

This grill should be installed in conformity with local codes. In absence of local codes, install to the current Natural Gas and Propane Installation Code CSA B149.1 in Canada, or the National Fuel Gas Code ANSI Z223.1/NFPA 54 in the United States.

If a rotisserie motor is used, it must be electrically grounded in accordance with local codes. If an external electrical source is utilized, the appliance must also be grounded in accordance with local codes. In absence of local codes, follow the current Canadian Electrical Code CSA C22.1 in Canada, or the National Electrical Code ANSI/NFPA 70 in the United States.

WARNING! Electrical Precautions

Keep all electrical supply cords and fuel supply hoses away from all heated surfaces.

To protect against electric shock, do not immerse the cord or plug in water or other liquids.

When connecting, first connect plug to appliance, then plug the appliance into outlet. Use only a Ground Fault Interrupter (GFI) protected circuit with this outdoor cooking appliance.

Never remove the grounding plug. Never use with an adapter of 2 prongs. Use only extension cords with a 3 prong grounding plug that has been rated for the power of the equipment and approved for outdoor use with W-A marking.

WARNING! Operation

Read this entire Owner's Manual before operating this grill.

Leak Test this grill before each use, annually and when any gas components are replaced.

Follow the lighting instructions carefully.

Do not let the cord hang over the edge of a table.

Do not use this grill for purposes other than intended.

Do not operate this grill with a damaged cord, plug, or after the grill malfunctions or has been damaged in any manner. Contact Napoleon for repair.

WARNING! Installation & Assembly

Assemble this grill exactly as instructed in the Assembly Guide. If the grill was assembled in-store, review the assembly instructions to ensure it is done correctly. This grill is not intended to be installed in or on boats or installed in or on recreational vehicles.

Perform the required Leak Test before operating the grill.

Do not modify this grill under any circumstances.

Allow grill to cool before installing or removing parts.

Do not use a cylinder that is not equipped with a QCC1 type connection.

Only use the pressure regulator and hose assembly supplied with this grill or replacement parts specifically recommended by Napoleon.

WARNING! Storage & Disuse

Turn off gas at the propane cylinder or natural gas supply valve.

Disconnect the hose between the propane cylinder and grill.

Remove the propane cylinder and store outdoors in a well-ventilated space away from children.

Unplug from the outlet when not in use and before cleaning.

DO NOT store propane cylinders in a building, garage, shed, or any other enclosed space.

Disconnect the natural gas hook-up from the supply when storing the grill indoors.

WARNING! California Proposition 65

This product can expose you to chemicals including soot, which are known to the State of California to cause cancer, and chemicals including carbon monoxide, which are known to the State of California to cause birth defects or other reproductive harm. For more information go to www.P65Warnings.ca.gov.

CONTENTS

Welcome to Napoleon! 3

Safety First

Full System Features 4

Getting Started 5

Cut-Out Dimensions

Gas Connections

Leak Test

Operation 10

Lighting your grill

Grilling Instructions

How to use the Rear Burner & Rotisserie

The Grilling Experience Checklist

How to season cast iron cooking grids

Infrared Grilling Guide 16

Cleaning Instructions 17

Maintenance Instructions 20

Combustion in air adjustment

Stainless in harsh environments

Troubleshooting 22

Diagram for Electrical Connections

Warranty 25

FC 27 ES 53

PHONE: 1-866-820-8686

EMAIL grills@napoleon.com

ONLINE www.napoleon.com

Full System Features

ACCU-PROBE™ Temperature Gauge to easily read the temperature for perfect results

Dual Rear Infrared Rotisserie Burner. Perfect for high heat searing and slow spit roasting

Seamless Stainless Steel Construction for flawless installation and long lasting quality

Interior Lights for late night entertaining

Dual Range Top Burner for versatile grilling options to create delicious side dishes, sauces and more

Large Stainless Steel Warming Rack for increased cooking area

Large stainless steel Iconic **WAVE™** rod cooking grids with dual position for those distinctive sear marks

Dual-level Stainless Steel Sear Plates for consistent even heating and vaporizing drippings for more flavourful food

Cooking system with dedicated Dual infrared **SIZZLE ZONE™** Burner for perfectly grilled steaks

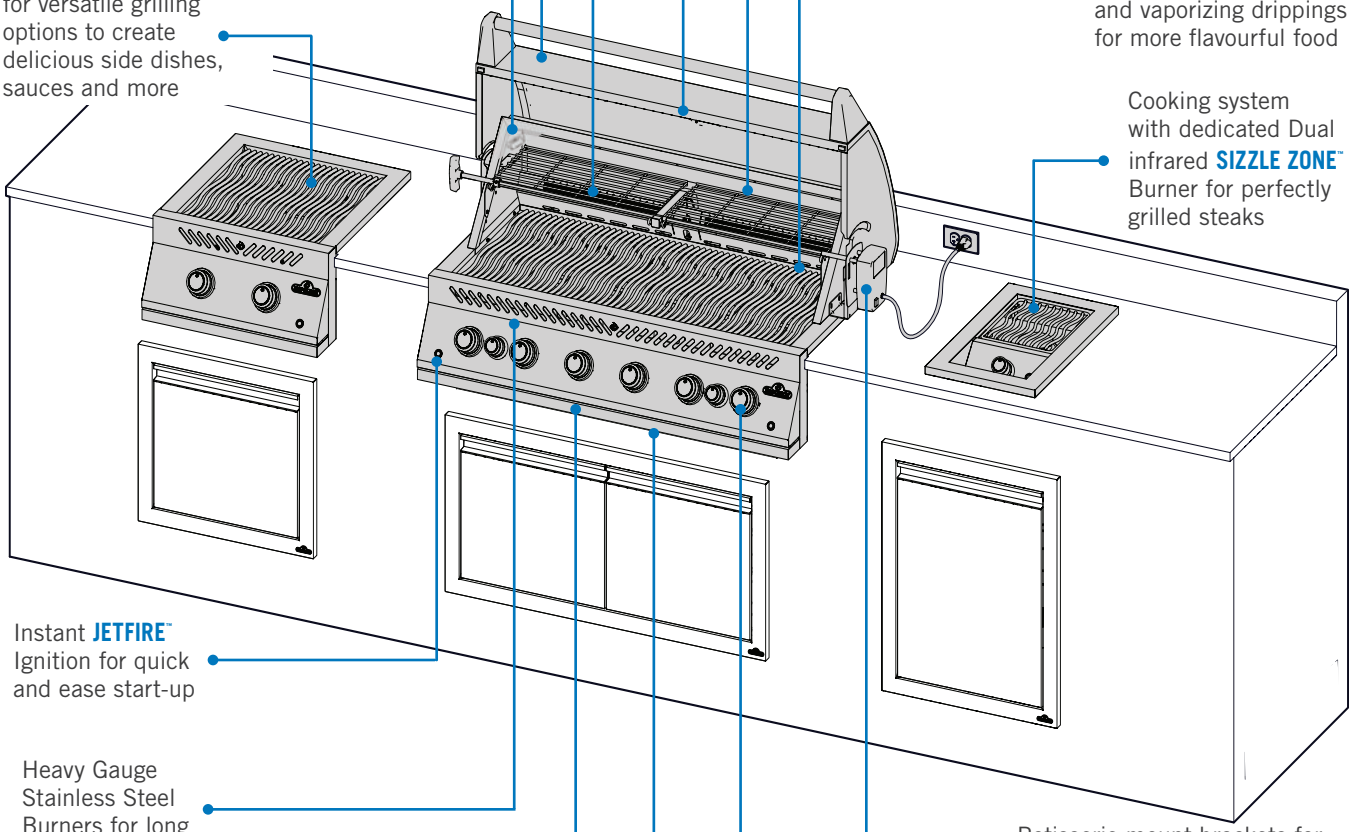

Instant **JETFIRE™** Ignition for quick and ease start-up

Heavy Gauge Stainless Steel Burners for long lasting quality

Collapsible rotisserie forks pack neatly in the storage compartment

Integrated storage for rotisserie kits for more convenience

Rotisserie mount brackets for convenient assembly on both sides of grill

Back-lit Control Knobs for late night entertaining

Easy access to drip pan with stainless steel roller bearings for efficient maintenance

The grills illustrated in this Owner's Manual may differ from the model you purchased. Featured model: BIG 44-1

Getting Started

DANGER / WARNING! Advises of a hazard that could result in a fire, explosion, death or serious physical injury.

WARNING / CAUTION! Advises of a hazard that could result in minor physical injury or property damage.

Wear protective gloves.

Wear safety glasses.

CAUTION! Hot surface.

Important information.

Do not smoke while performing a gas leak test. Sparks or flames will cause a fire, explosion, damage to property, serious physical injury, or death.

Never use an open flame to check for gas leaks. Sparks or flames will cause a fire, explosion, damage to property, serious physical injury, or death.

DANGER! Immediately shut off the gas supply and disconnect.

Additional Safe Operating Practices

- Do not route the hose underneath the drip pan. Maintain proper hose clearance to the bottom of the unit.
- Ensure sear plates are positioned properly according to sear plate installation instructions.
- Burner controls must be off when turning the gas cylinder valve on.
- Do not light burners with the lid closed.
- Do not operate the rear burner(s) with the main burners.
- Do not close the side burner lid when operating or hot.
- Do not deep fry food on the side burner.
- Do not adjust the cooking grids when operating or hot.
- Do not move the appliance during use.
- Turn off the gas supply at the source after use.
- Do not modify the appliance.
- Maintenance should only be done when the grill is cool.
- Do not store lighters, matches or any other combustibles inside the enclosure or condiment tray.
- Keep all electrical supply cords and fuel supply hoses away from all heated surfaces.
- Clean the grease tray, drip pan, and sear plates regularly to avoid build-up and grease fires.
- Keep the infrared burner and main burner venturi tubes free from spider webs and other obstructions by inspecting and cleaning it regularly.
- Do not allow cold water (rain, sprinkler, hose etc.) to contact the heated grill. An immediate temperature change will chip the porcelain and crack the ceramic burners.
- Do not use a pressure washer to clean any part of the grill.
- Do not locate this grill where it can be exposed to high winds, especially when the wind can come from directly behind the grill.
- Do not operate appliance under any combustible construction.
- Never cover more than 75% of the cooking surface with solid metal.
- This appliance must be kept away from flammable materials while in use.
- Always maintain a minimum wall distance to combustibles of 17" (431mm) to the rear and 9" (228.6mm) to the sides.
- BIB18PB requires a minimum of 17" (431mm) to the rear and 20" (508mm) to the sides.
- Always maintain a minimum distance of 17" (431mm) between other additional appliances.

CAUTION! The hook-up and installation of the gas and hose connection must be performed by a licensed gas fitter, and leak tested before operating the grill.

CAUTION! Ensure the hoses do not contact any high temperature surfaces of the grill.

WARNING! Accessible parts may be very hot. Keep young children away.

Cut-Out Dimensions

MODEL		OPENING DIMENSIONS (INCH / CM)				OPENING DIMENSIONS (INCH / CM) INSTALLING ZERO CLEARANCE LINER			
		W	X	D	H	W	X	D	H
BIG32-1 / BI32	Min.	30 / 76.2	33.50 / 85.1	19.4 / 49.3	10.25 / 26.0	34 / 86.4	35.38 / 89.9	21.38 / 54.3	10.38 / 26.4
	Max.	32 / 81.3	-	19.75 / 50.2	-	-	-	-	-
BIG38-1	Min.	36 / 91.4	39.50 / 100.3	19.4 / 49.3	10.25 / 26.0	40 / 101.6	41.38 / 105.1	21.38 / 54.3	10.38 / 26.4
	Max.	38 / 96.5	-	19.75 / 50.2	-	-	-	-	-
BIG44-1	Min.	42 / 106.7	45.50 / 115.6	19.4 / 49.3	10.25 / 26.0	46 / 116.8	47.38 / 120.3	21.38 / 54.3	10.38 / 26.4
	Max.	44 / 111.8	-	19.75 / 50.2	-	-	-	-	-
BIB18	Min.	18 / 45.7	21.50 / 54.6	19.4 / 49.3	10.25 / 26.0	22 / 55.9	23.38 / 59.4	21.38 / 54.3	10.38 / 26.4
	Max.	20 / 50.8	-	19.75 / 50.2	-	-	--	-	-
BIB12 / BI12	Min.	12 / 30.5	15.50 / 39.4	19.4 / 49.3	10.25 / 26.0	16 / 40.6	17.38 / 44.1	21.38 / 54.3	10.38 / 26.4
	Max.	14 / 35.6	-	19.75 / 50.2	-	-		-	-
BIB10 / BI10	Min.	10 / 25.4	-	18.75 / 47.6	6 / 15.2	-	-	-	-
	Max.	12 / 30.5	-	20.75 / 52.7	-	-	-	-	-

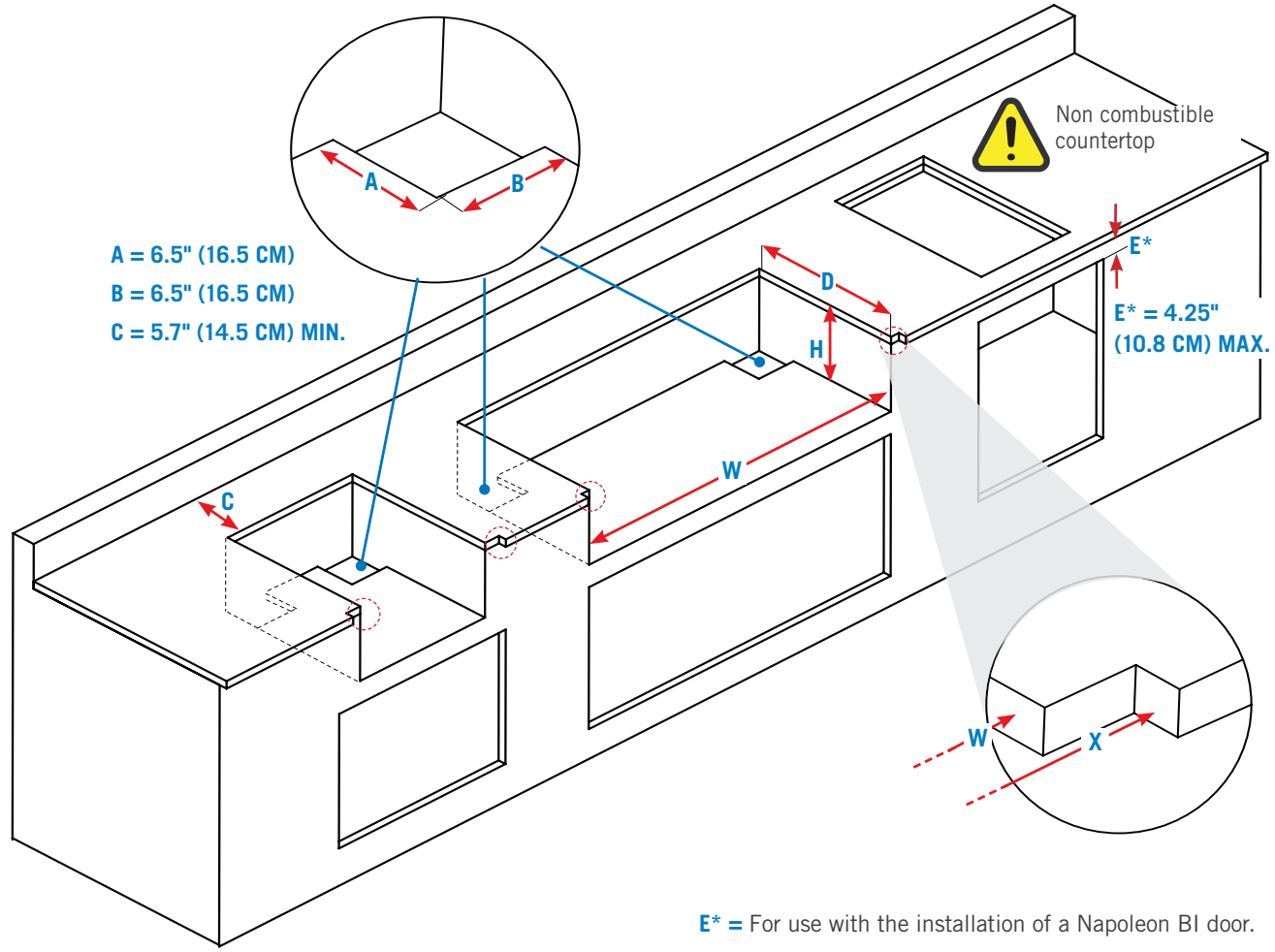

E* = For use with the installation of a Napoleon BI door.

WARNING! The cabinet frame and the cabinet MUST be made from non-combustible material when the appliance is not installed with the Zero Clearance Liner corresponding to your unit. Refer to the parts list in your Assembly Guide for specific information.

CAUTION! If enclosure houses an LPG cylinder, this construction must comply with the built-in cylinder enclosure instructions. Refer to **'Gas Connections'**.

Gas Connections

This grill must operate with a gas supply pressure of 11 inches water column (0.39 psi) for propane and 7 inches water column (0.25 psi) for natural gas. If the gas supply exceeds these requirements a regulator must be installed upstream of the grill's components. If the gas supply is lower than the requirements, the unit will be under fired and will not reach the maximum temperatures.

To a House Gas Supply Line

The piping up to the grill is the responsibility of the installer.

- The gas pipe must be sized to supply the BTU/h specified on the rating plate, based on the length of the piping run.
- If you are installing a side burner, a separate gas line must be branched off to the unit through a specific opening in that location.

1. A readily accessible manual shut-off valve must be installed upstream of the unit. A flexible metal connector is included to simplify the installation. Connect the other end of the connector to the gas piping.
2. Tighten using two wrenches. Do not use thread sealer or pipe dope.
3. Ensure that the connector does not pass through a wall, floor, ceiling or partition, and is protected from damage.
4. Leak test all joints prior to operating the grill. See "**Leak Test**".

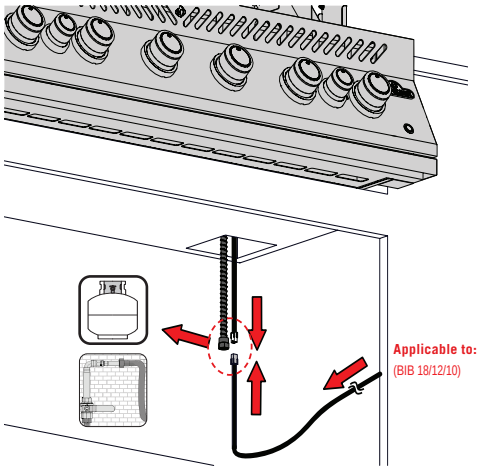

WARNING! The connectors must be of rigid pipe, copper tube or approved flexible metal which must comply with Z21.24/CSA 6.10 or ANSI Z21.75/CSA 6.27

To a Portable Propane Cylinder

Only use a propane cylinder constructed and marked in accordance with the Specifications for LP gas Cylinders of the U.S. Department of Transportation (D.O.T.) or the Standard for Cylinders, Spheres and Tubes for Transportation of Dangerous Goods and Commission, CAN/CSA-B339, as applicable.

The cylinder connection device must be compatible with the connection for this outdoor appliance.

The propane cylinder must have:

- A shutoff valve with a QCC1 connection
- A safety relief device
- A collar to protect the valve
- A listed Overfill Protection Device

1. Check the cylinder for dents or rust, and have it inspected by your propane supplier.
2. Ensure the gas regulator hose has no kinks.
3. Do not route the hose in close proximity to the drip pan.
4. Remove the cap or plug from the cylinder fuel valve.
5. Insert the black QCC1 regulator nipple onto the QCC1 fuel valve. Hand tighten to right. Do not use tools.
6. Ensure the hose does not contact any high temperature surfaces of the grill because it will melt and cause a fire.
7. Leak test all joints prior to operating the grill. See "**Leak Test**".

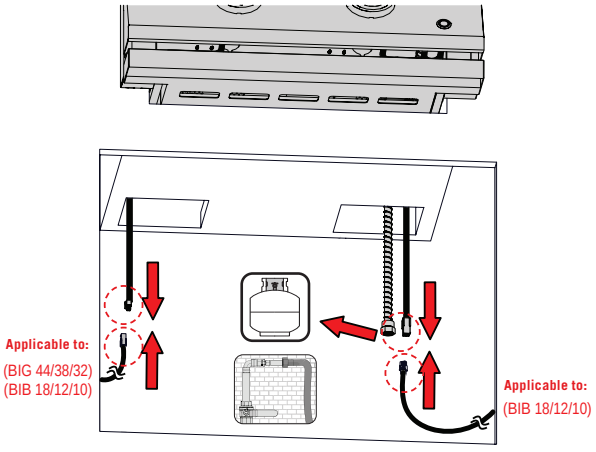

WARNING! Do not store a spare gas cylinder below the grill head or side burners.

WARNING! Never use a gas cylinder that is beyond 80% full.

WARNING! Follow all specifications and instructions exactly to prevent fire, explosion, property damage, personal injury, or death.

WARNING! Disconnect the grill and its individual shutoff valve from the gas supply piping system during any pressure testing in excess of ½ psi (3.5 kPa).

If placing the Cylinder in a Built-in Enclosure

- The design of the enclosure should allow for the gas cylinder to be connected, disconnected, and the connections inspected and tested outside of it. The connections that could possibly be disturbed when installing the cylinder in the enclosure can be leak tested inside.
- The cylinder must be isolated from the grill enclosure, and protected from radiation, flames, hot drippings, and other foreign or hazardous materials.
- A door on the enclosure to access the cylinder is acceptable if it is non-locking and can be opened without using tools.
- There must be a minimum clearance of 2 in (5.08 cm) between the floor of the cylinder enclosure and the ground.
- Ensure there are at least two unobstructed ventilation openings on the exposed exterior side of enclosure, one within 5 inches (12.7 cm) of the top of the enclosure, and another within 1 inch (2.54 cm) of the cylinder opening's bottom surface.
- The top opening must have a total free area of more than 20 in^2 (130 cm^2) for a 20 lb (9.1 kg) cylinder and 30 in^2 (195 cm^2) for a 30 lb (13.6 kg) cylinder
- The bottom opening must have a total free area of more than 10 in^2 (65 cm^2) for a 20 lb (9.1 kg) cylinder and 15 in^2 (100 cm^2) for a 30 lb (13.6 kg) cylinder.
  The upper edge must be no more than 5 in (127 mm) above the floor level.
- Every opening must be large enough to permit the entrance of a 1/8 in (3.2 mm) rod.
- The opening must have a free area depending on the cylinder size:

Cylinder size	Opening A area	Opening B area
20 lb (9.1 kg)	20 inches² (130 cm²)	10 inches (65 cm²)
30 lb (13.6 kg)	30 inches² (195 cm²)	15 inches² (100 cm²)

Maximum Cylinder Dimensions

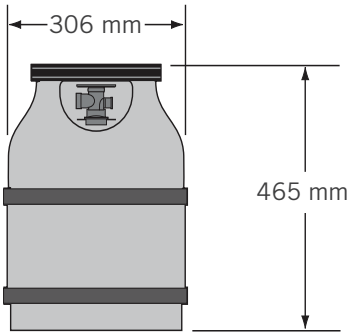

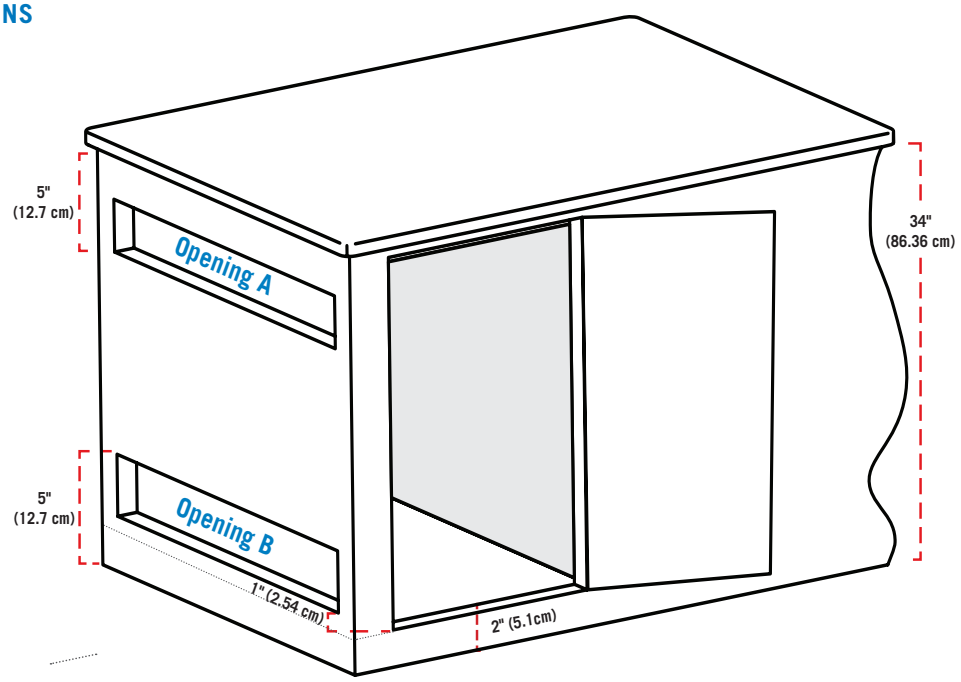

WARNING! Close the individual shutoff valve to isolate the grill from the gas supply piping system during any pressure testing equal to or less than ½ Psi (3.5 kPa).

WARNING! Check the hose for evidence of excessive abrasion, melting, cuts or cracks. If the hose is damaged, it must be replaced with an assembly specifically recommended by Napoleon.

Leak Test

Why and When to Leak Test?

A leak test confirms no gas is escaping after you connect the hose to the gas supply.

Each time the tank is refilled and reinstalled, ensure that there are no leaks in the fitting where the regulator connects to the tank.

Leak test this grill before use, annually, and when any gas components are replaced.

Leak Test Steps

1. Do not smoke while performing the test.
2. Remove all sources of ignition.
3. Turn all burner controls to the off position.
4. Turn the gas supply valve on.
5. Brush a half-and-half solution liquid soap and water onto all joints and connections of the regulator, hose, manifolds, and valves.
6. Bubbles indicate a gas leak.

If you find a leak

1. Tighten any loose joints.
2. If the leak cannot be stopped, immediately shut off the gas supply and disconnect the grill.
3. Have the grill inspected by a certified installer, or dealer.
4. Do not use the grill until the leak has been fixed.

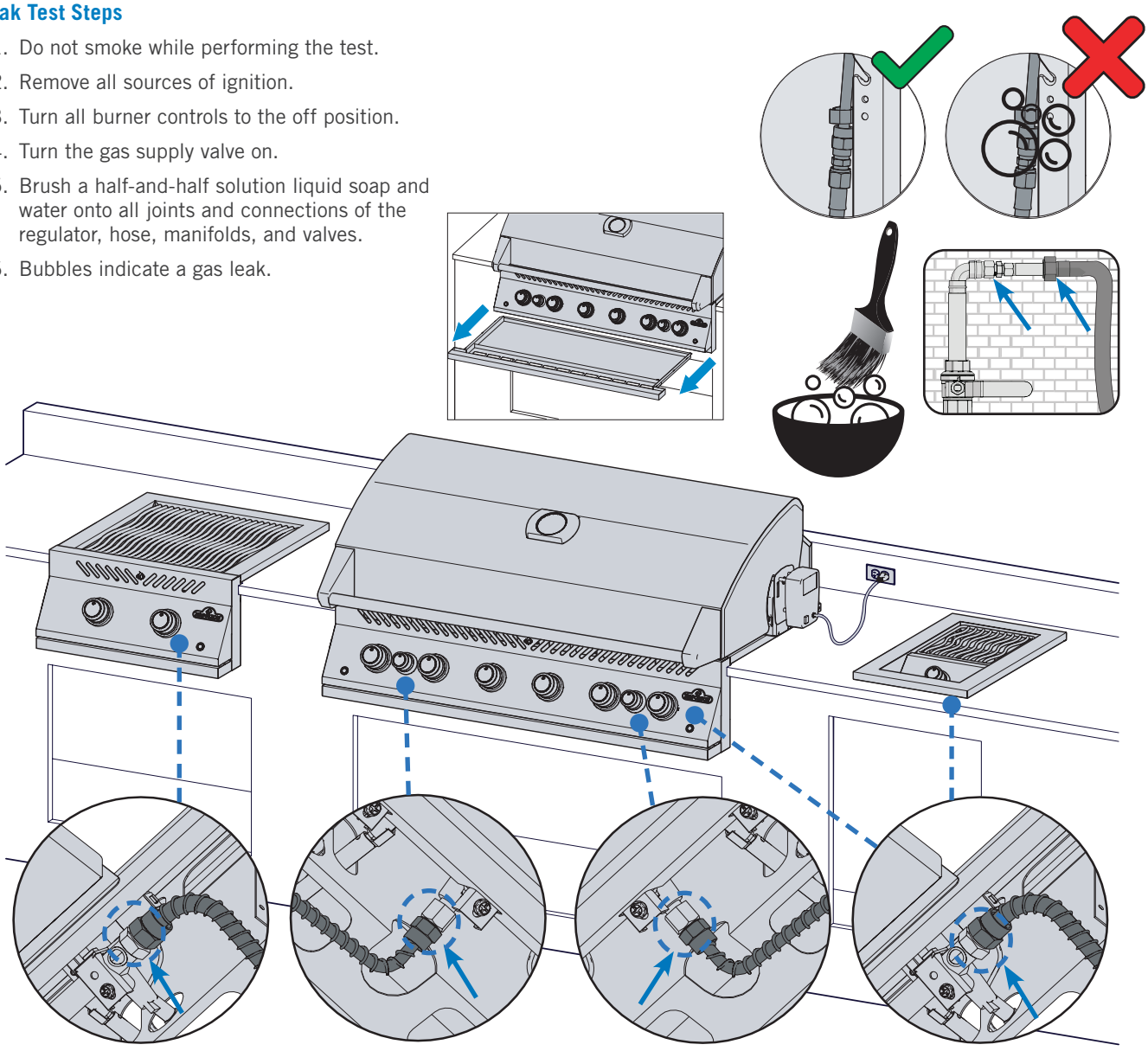

WARNING! Never use an open flame to check for gas leaks. Sparks or flames will cause a fire, explosion, damage to property, serious physical injury, or death.

WARNING! Only use the pressure regulator and hose assembly supplied with the grill, or one in conformity with local codes.



Operation

Lighting your grill

Is it the very first time? Perform a Burn-off

Remove warming rack and run the main burners on high for 30 minutes. It is normal for the grill to emit an odor the first time it is lit. This odor is caused by the "burn-off" of internal paints and lubricants used in the manufacturing process and will not occur again.

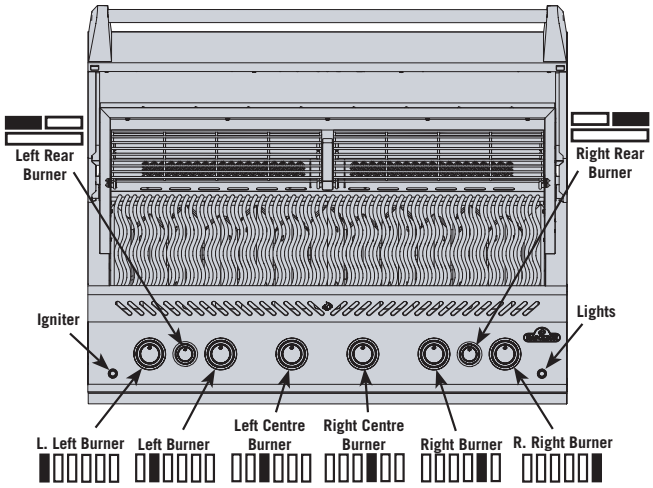

Main Burner Lighting

1. Open grill lid.
2. Push and slowly turn any main burner knob counter clockwise to HIGH position until pilot lights. Continue to push down on the control knob until the burner lights and then release.
3. If the pilot does not light – immediately turn the control knob clockwise to the OFF position. Repeat step 2.
4. If the pilot and burner will not light in 5 seconds – turn the control knob clockwise to the OFF position. Wait 5 minutes for gas to dissipate. Repeat steps 2 and 3, or light with a match. (Fig. 1) .

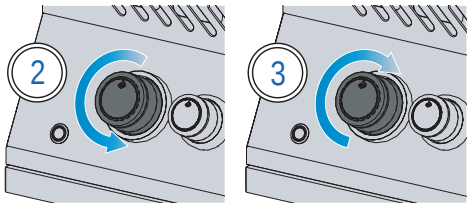

Fig. 1

WARNING! Do not use the rear burner while operating the main burner.

Rear Burner Lighting (if equipped)

1. Open grill lid.
2. Remove warming rack.
3. Push and slowly turn rear burner knob counter clockwise to HIGH position.
4. Press and hold igniter button until the burner lights, or light by match.
5. If the burner will not light – turn burner control knob clockwise to the OFF position. Wait 5 minutes. Repeat step 3 and 4. (Fig. 1)

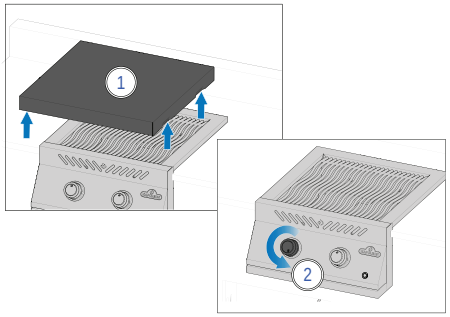

Fig. 2

Side Burner Lighting (if equipped)

1. Open burner cover.
2. Push and slowly turn side burner knob counter clockwise to HIGH position.
3. Press and hold igniter button until the burner lights, or light by match.
4. If the burner will not ignite – turn burner control knob clockwise to the OFF position. Wait 5 minutes. Repeat step 2 and 3. (Fig. 2)

Lighting with a match

1. Clip the match into the supplied lighting rod.
2. Insert the lit match through the cooking grids and sear plates
3. While turning the corresponding burner knob to high. (Fig. 3)

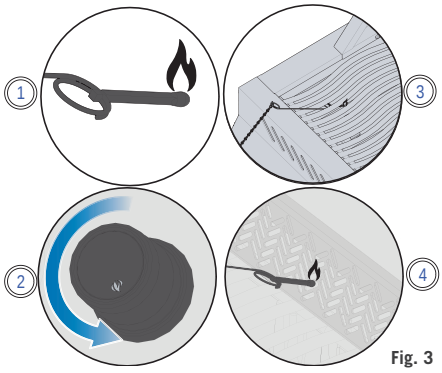

Fig. 3



WARNING! Ensure all burner controls are in the OFF position before slowly turning on gas supply valve.

WARNING! Follow the lighting instructions carefully.

WARNING! Make sure the lid of the grill is OPEN while igniting.

WARNING! Do not adjust the cooking grids while the grill is hot, or operating.

Grilling Instructions

Main Burner Use

- Preheat the grill before searing food by operating all main burners on high with the lid closed for approximately 10 minutes.
- Food cooked for only a short time such as fish and vegetables can be grilled with the lid open.
- Grilling with the lid closed ensures higher and consistent temperatures that cook meat more evenly and can reduce cooking times.
- The cooking grids can be oiled before preheating to reduce sticking when grilling lean meat such as chicken breast, or pork.
- Food that takes longer than 30 minutes such as roasts can be cooked indirectly with the burner lit opposite the food. See '**Indirect Grilling'.**
- Trim excess fat off meat to prevent flare-ups, or reduce the temperature of the grill.
- Flare ups – move food away from the flames and reduce the heat. Leave the lid open.

Direct Grilling

This method is often used for searing, or food cooked for only a short time such as hamburgers, steaks, chicken, or vegetables.

Place food on the cooking grids directly over the heat.

Sear meat first to trap-in the juices and flavor.

Lower the grill temperature to finish cooking to your preference.

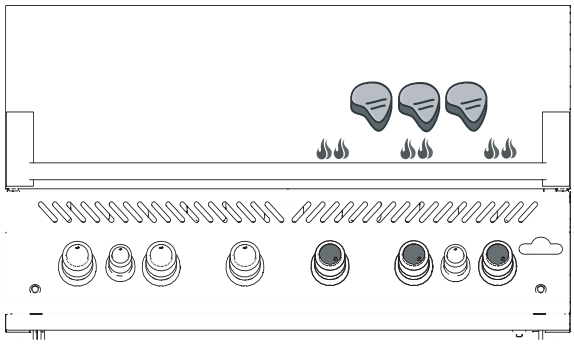

Indirect Grilling

This method uses lower temperatures and circulates heat around the food cooking it slowly and evenly. Use this method to cook larger cuts of meat, or food prone to flare-ups such as roast, chicken, or turkey.

Turn one or more burners on and place food on the cooking grid where there is no flame, or burner on.

Grilling at a lower temperature and slower cooking time results in more tender meats.

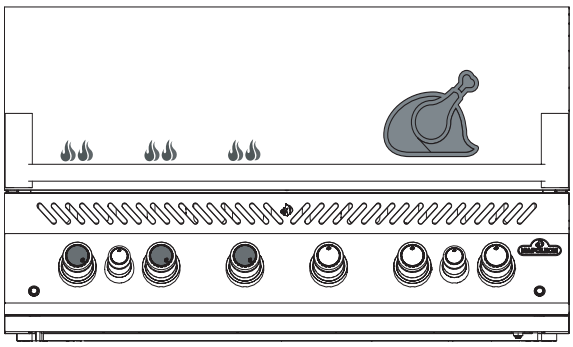

Infrared Main Burner Use (if equipped)

Follow the "**Main Burner Lighting"** Instructions and operate on high for 5 minutes with the lid closed or until the ceramic burners glow red.

Cook the food directly on the grid(s) following the directions on the **"Infrared Grilling Guide"**. Food can be seared on the infrared burner and then transferred to the main burners of the grill to finish cooking over direct or indirect heat, depending on your taste and preference.

BE CAREFUL!

The lid of the grill and the entire firebox can become very hot when in use.

WARNING! Never grill food directly on the flame side burner. It is designed for use with pots and pans only.

WARNING! Do not close side burner lid while it is operating or hot.

WARNING! Do not deep fry food on the side burner. Cooking with oil can be dangerous.

WARNING! Regularly clean grease out of the entire unit, including the grease tray and the sear plates, to avoid build-up and grease fires.

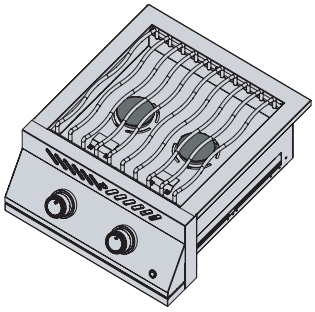

Flame Side Burner (if equipped)

The flame side burner can be used like a stove top to make gravy or soups.

The recommended pot or pan diameter is 10” (25 cm).

Be sure your grill is in a location protected from the wind, or the performance of the side burner will be affected.

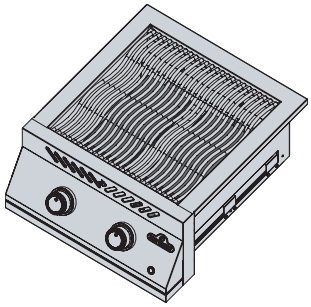

Infrared Side Burner (if equipped)

To operate, follow the “**Side Burner Lighting”** instructions. The infrared heat provides an even cooking area for searing food when it’s set to high.

Be careful to never cover more than 75% of the cooking surface

Some side burner models have a height-adjustable cooking grid.

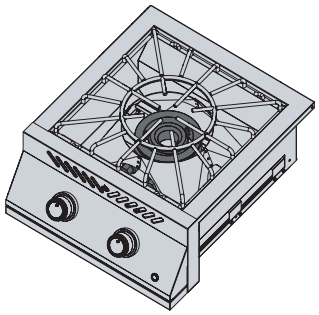

Power Burner (If equipped)

The power burner has 2 concentric burners. Use pots with a minimum of 10" (25 cm) diameter when using the center burner, and a minimum of 14" (35.5 cm) diameter when using the outer burner.

For wok cooking , remove the center ring from the cooking grate. Respect the minimum pot sizes for inner and outer burners.

Note: Never leave a burner on without a filled pot or pan above it

Grilling at Night (if applicable)

Illuminate the control knobs and grill interior (if applicable) by pushing the light bulb icon on the control panel.

When a burner is operating, the corresponding knob will glow red, while the rest will remain blue.

GRILLING PRO TIP!

Use a thermometer to check the internal temperature of meat to ensure it is cooked perfectly.

GRILLING PRO TIP!

Add a Napoleon smoker accessory to your grill to flavor your meat.

WARNING! Do not leave food unattended on any lit burners.

WARNING! Keep the lid open if main infrared burner is set on high to prevent accidentally burning food.

How to use the Rear Burner & Rotisserie

Assembling Your Rotisserie Kit (if equipped)

Note: Remove the warming rack prior to using the rear burner and spit rod. Extreme heat will damage the warming rack.

1. Install the rotisserie motor on the side of the grill using the mounting bracket(s). Some models have pre-mounted brackets.
2. Once the bracket has been fastened to the grill, slide the rotisserie motor onto the bracket.
3. Slide the first rotisserie fork just past the middle of the spit rod and tighten into place. Thread the meat onto the spit rod and push the meat into the fork. Slide the second rotisserie fork on the opposite end of the spit rod and push the fork into the meat until secure. Tighten the fork into place.
4. Carefully insert the pointed end of the spit rod into the rotisserie motor and set the opposite end across the hangers. The heavy side of the meat will naturally hang down to balance the load.
5. Slide the stop bushing onto the spit rod until it is past the inside of the hood. This will secure the side to side movement of the spit rod.
6. Tighten the stop bushing and spit rod handle. Place a metal dish under the meat to collect the drippings.

IMPORTANT! Always wear gloves when handling components of the grill.

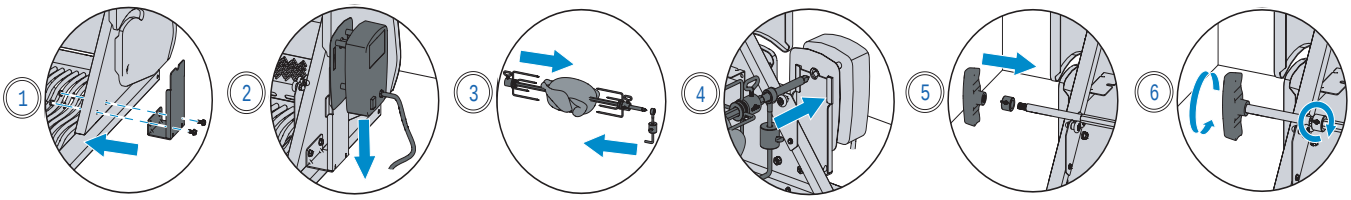

BIG 44-1 Spit Rod: Option 1

- The rotisserie motor can be mounted on either side of the grill using the mounting bracket.
- Be sure to remove the warming rack depending on which side you wish to cook on.
- Follow instructions **3-4** from **'Using the Rear Burner and Rotisserie Kit'.**
- Place a metal dish under the meat to collect the drippings.

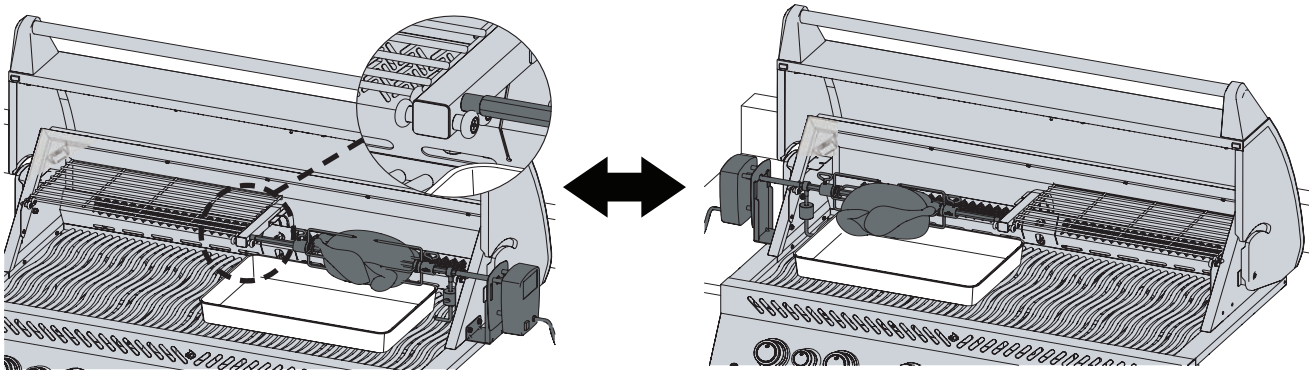

BIG 44-1 Spit Rod: Option 2

- With the purchase of the rotisserie add-on accessory, you are able to have two rotisseries operating at the same time for more cooking convenience.
- Be sure to remove both warming racks and install the additional rotisserie motor to the opposite side.
- Follow instructions **3-4** from **'Using the Rear Burner and Rotisserie Kit'** to load both spit rods.
- Place a metal dish under the meat to collect the drippings.

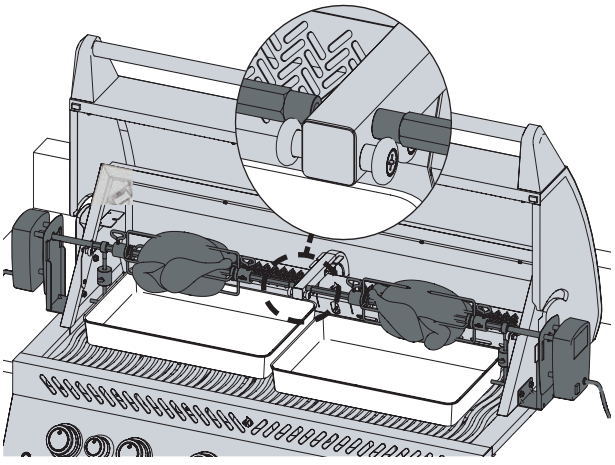

Spit Rod: Option 3

- After removing both warming racks and installing the rotisserie motor, you need to remove the Rotisserie Support Arm.
- Carefully remove the two fasteners securing the Rotisserie Support Arm to the grill.
- Once the Rotisserie Support Arm has been removed, install the rod extension by inserting the threaded end and turning clockwise into the corresponding end of the spit rod.
- Follow steps **3-6** from **"Using the Rear Burner and Rotisserie Kit'.**

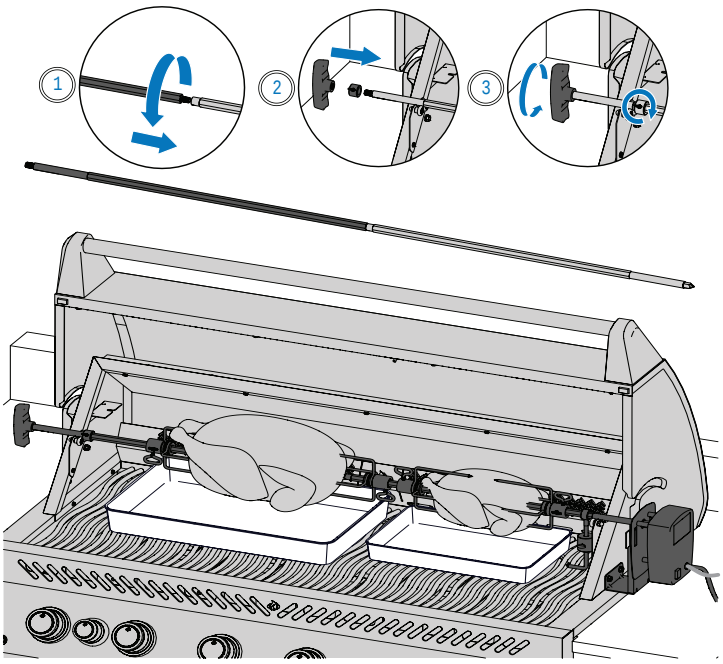

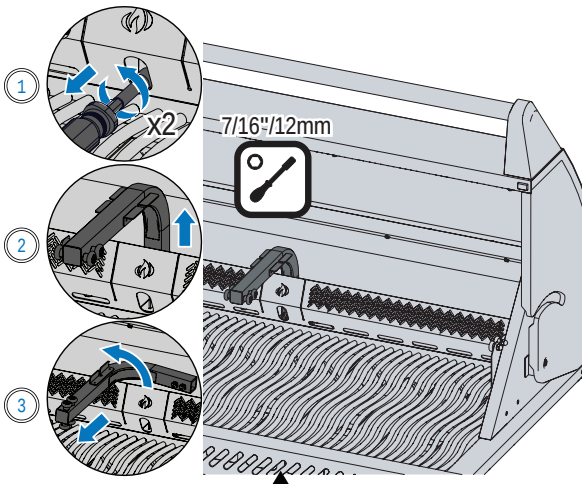

Removing Support Arm

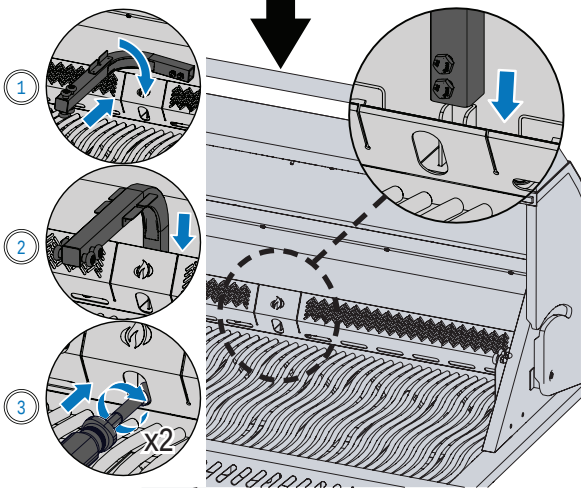

Adding Support Arm

Tips about using the Rotisserie:

- Operate the rear burner on high until the meat browns. Reduce heat. Keep lid closed.
- Use a thermometer to check the internal temperature of the meat.
- Roasts and poultry should brown on the outside and stay tender on the inside.
- Use drippings to baste and make gravy.
- A 3-pound chicken takes approximately 1 ½ hours on medium to high.
- Be mindful of your rotisserie motor capacity. Never overload your equipment.
- Be sure to always set an evenly balanced load on your rotisserie.

How to cook multiple chickens

1. Tie or skewer wings to the body of the chickens.
2. Slide rotisserie fork onto spit rod.
3. Thread first chicken onto spit rod until it is held into place by the rotisserie fork. Tighten.
4. Thread next 2 chickens onto spit rod so all the chickens are close together.
5. Slide second rotisserie fork onto spit rod and push into chicken until all 3 chickens are squeezed together tightly. Tighten.

DID YOU KNOW?

You can remove the cooking grids if they interfere with cooking larger cuts of meat.

WARNING! Use only untreated wood or wood purchased from an authorized Napoleon dealer.

WARNING! Disassemble rotisserie components when finished cooking, wash with warm soapy water, and store indoors.

WARNING! Use heat resistant grilling gloves when handling the hot rotisserie components.

WARNING! Disconnect rotisserie plug from the outlet when the grill is not in use.

The Grilling Experience Checklist

Refer to this list every time you grill

☐ **Read Owner's Manual**

Be sure to have read the owner's manual and all the safety instructions.

☐ **Clean grease tray**

Always ensure you clean the grease tray prior to grilling to avoid fires and flare-ups.

☐ **Check the hose**

Ensure the grill is off and cool. Check the hose for evidence of excessive abrasions, or cuts. Have the hose replaced before use if the hose is damaged.

☐ **Preheat and clean grids**

Coat the grids with vegetable shortening and preheat your grill to burn off excess residue and prevent sticking. Clean cast iron grids with a brass wire brush and stainless steel grids with a stainless brush. See "**Cleaning Instructions**".
NOTE: Stainless steel cooking grids are corrosion resistant and require less maintenance than cast iron grids.

☐ **Prep area**

Make sure everything you need while grilling such as your utensils, seasonings, sauces, and dishes are within your reach. Don't leave your food unattended, or it could burn.

☐ **Flip once and do not peek**

Try not to open the lid and peek too much, or heat will escape and throw your temperature and cooking times off. Flip your food only once, especially steak and chicken.

☐ **Leave space**

Leave some space on the grill and between food, so you have room to move food around if you need to.

☐ **Use a thermometer**

Use a thermometer to ensure food is cooked thoroughly. Follow the appropriate temperatures guidelines for all types of meat, especially poultry.

GRILLING PRO TIP!

Get inspired to create delicious meals from the recipes and grilling techniques at www.napoleon.com and Napoleon's cookbooks.

GRILLING PRO TIP!

Always preheat the grill before cooking to burn off leftover residue and prevent food from sticking to the grate.

OIL AND FAT SUGGESTION!

- Grapeseed Oil
- Sunflower Oil
- Soybean Oil
- Extra Virgin Olive Oil
- Canola Oil

If not available, select an oil or fat that has a high smoke point. Do not use salted fats like butter or margarine.

How to season cast iron cooking grids (if applicable)

This procedure MUST be done prior to first use and repeated every 3-4 uses to keep grids looking new.

1. Remove cast iron grids from the grill.
2. Wash grids with warm soapy water and soft cloth. Pat dry and allow grids to completely dry.
3. Apply fat/oil evenly using a silicone brush on both sides.
4. Preheat appliance to 350°F - 400°F (176°C - 204°C).
5. Install cooking grids and cook for 30 minutes.
6. Apply a second even coat of fat/oil on cooking grids, and keep cooking for 30 more minutes.
7. Grids are now seasoned.

NOTE: If rust has formed on the cast iron grids, remove the rust with scouring pad or brass brush and repeat the seasoning process.

Infrared Grilling Guide

FOOD	CONTROL KNOB SETTING	COOKING TIME	SUGGESTIONS
 **Steak** **1 inch (2.54 cm) thick**	HIGH – 2 minutes each side	Rare – 4 minutes	Ask for marbled fat in cut. Fat is a natural tenderizer and keeps meat juicy.
	HIGH to MEDIUM – High heat 2 minutes each side then turn to medium heat	Medium – 6 minutes	
		Well done – 8 minutes	
 **Hamburger** **½ inch (1.27 cm) thick**	HIGH – 2 minutes each side	Rare – 4 minutes	Keep patties all the same thickness for equal cooking times. Patties 1 inch thick or more should be grilled using indirect heat.
	HIGH – 2 ½ minutes each side	Medium – 5 minutes	
	HIGH – 3 minutes each side	Well done – 6 minutes	
 **Chicken**	HIGH, MEDIUM, LOW – 2 minutes each side then medium-low to low heat	20 – 25 minutes	Slice joint connecting the thigh and leg ¾ through for the meat to lie flat on the burner and cook evenly.
 **Pork Chops**	MEDIUM	6 minutes each side	Choose thick cuts for more tender meat. Trim off excess fat.
 **Spare Ribs**	HIGH to LOW – High for 5 minutes then low until finished	20 minutes each side turning often	Choose lean meaty ribs. Grill until meat pulls easily from the bone.
 **Lamb Chops**	HIGH to MEDIUM – High for 5 minutes then Medium until finished	15 minutes each side	Choose thick cuts for more tender meat. Trim off excess fat
 **Hot dogs**	MEDIUM to LOW	4 – 6 minutes	Select larger wieners and slit lengthwise before grilling

Cleaning Instructions

First Time Use

1. Wash grids by hand with water and mild dish soap to remove any residue from the manufacturing process. DO NOT wash in a dishwasher.
2. Rinse thoroughly with hot water and dry completely with a soft cloth to prevent moisture from entering the cast iron.

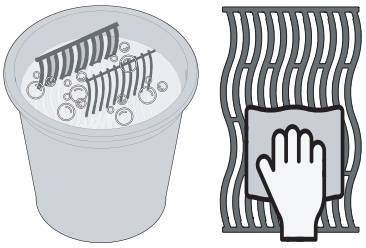

Cast Iron Grids

- Season your grids to add a protective coating to prevent corrosion See Grilling Tips – **How to Season your Cast Iron Cooking Grids**.

Stainless Steel Grids

- Stainless steel cooking grids can be cleaned by preheating the grill and using a wire brush to remove residue.
- Stainless steel grids will permanently discolor from regular use because of high temperatures when grilling.

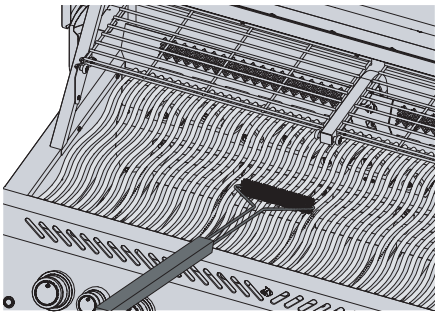

Infrared Side Burner

- Most drippings and food particles that fall on the infrared burner surface incinerates immediately because of the high intensity heat.
- Do not clean the ceramic tile with a wire brush.
- Do not use water or other liquids to clean the burner. An immediate change in temperature will cause cracking of the ceramic tile.
- Light burner and operate on high for 5-10 minutes to remove any left-over residue.

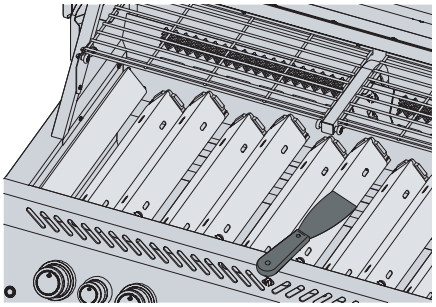

Inside of the Grill

1. Remove the cooking grids.
2. Use a brass wire brush to clean loose debris from the sides and underneath the lid.
3. Scrape the sear plates with a putty knife or scraper. Use a wire brush to remove the ash.
4. Remove the sear plates and brush debris from the burners with a wire brush.
5. Sweep debris from inside the grill into the drip pan.

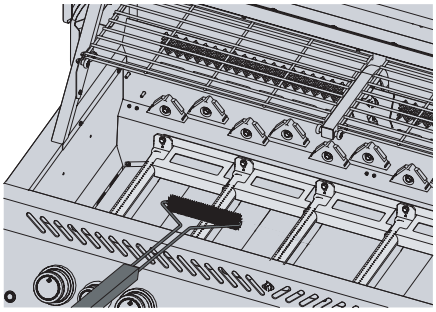

WARNING! Always wear protective gloves and safety glasses when cleaning your grill.

WARNING! Accumulated grease is a fire hazard.

WARNING! Cleaning should only be done when the grill is cool to avoid the possibility of burns.



Drip Pan

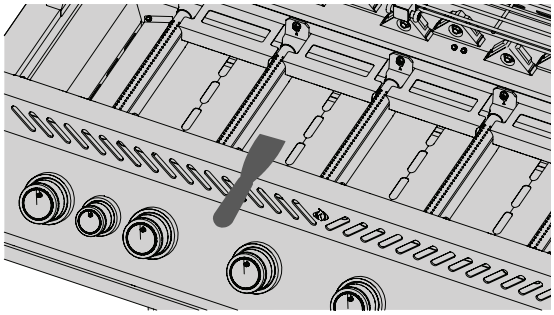

Every grill head, side burner and drop-in burner have a corresponding drip pan. It is easily accessible through doors or openings.

- Grease and excess drippings collect in the drip pan located beneath the grill and accumulate in the disposable grease tray below the drip pan (if applicable).
- Only use Napoleon approved liners on the drip pan. Never use aluminum foil, sand or any other unapproved material. This can prevent grease from flowing properly.
- Clean frequently to avoid grease build-up – approximately every 4-5 uses.

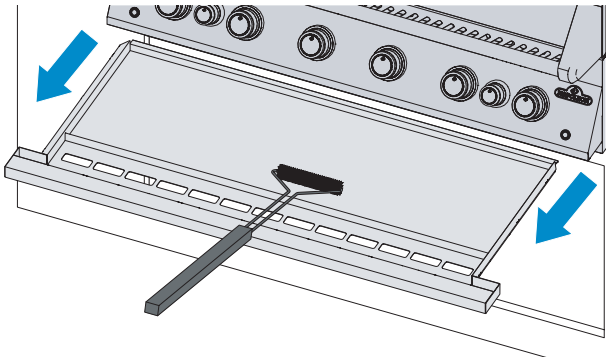

Cleaning steps:

1. Slide the drip pan from the grill to access the disposable grease tray or to clean the drip pan.
2. Scrape the drip pan out with a putty knife or scraper.
3. Replace the disposable grease tray every 2-4 weeks depending on grill usage (if applicable).
4. See your Napoleon Grill dealer for supplies.

Control Panel

ONLY use warm soapy water.

Text is printed directly on the control panel and will gradually rub off if abrasive or stainless steel cleaners are used.

Proper cleaning of the control panel will ensure the text remains dark and legible.

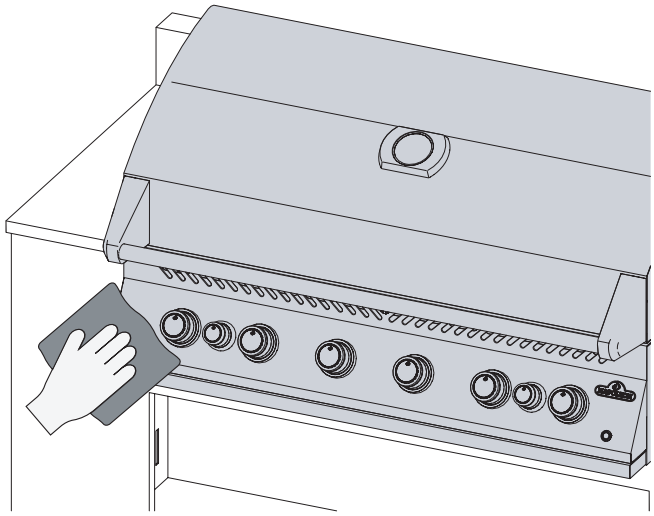

Aluminum Castings

Clean with warm soapy water.

Aluminum doesn't rust, but high temperatures and weathering can cause oxidization on the surface of the castings that look like white spots.

See "**Maintenance Instructions"** for more information on how to prevent oxidized aluminum.

Outside Grill Surface

- Only use a non-abrasive cleaner.
  Abrasive cleaners or steel wool will scratch the finish.
- Always wipe in the direction of the grain.
- Handle porcelain enamel components with care.
- The baked-on enamel finish is glass-like and will chip if struck.
- Stainless steel parts discolor overtime when heated and will turn a golden or brown hue. This is normal and won't affect the performance of the grill.

WARNING! Ensure all burners are turned off and grill is cool before cleaning. Do not use oven cleaner to clean any part of the grill. Do not put cooking grids or any other parts of the grill in a self-cleaning oven to clean. Clean the grill in an area where cleaning solution won't harm decks, lawns, or patios.

WARNING! Barbecue sauce and salt can be corrosive and will cause rapid deterioration of the grill components unless cleaned regularly.

Insect Screen and Burner Ports

Spiders and insects are attracted to small enclosed spaces.

Napoleon has equipped the burner with an insect screen on the air shutter. This reduces the likelihood of insects building nests inside the burner, but doesn't eliminate the problem.

A nest or web can cause the burner flame to burn a soft yellow or orange and cause a fire or flashback at the air shutter underneath the control panel.

1. Remove the screw (s) that attaches the burner to the back wall of the grill. Slide the burner back and upwards to remove.
2. Use a flexible venturi tube brush to clean the inside of the burner.
3. Shake loose debris from the burner through the gas inlet.
4. Check the burner ports and valve orifices for blockages: burner ports can close over time because of cooking debris and corrosion.
5. Use an opened paper clip, or the supplied port maintenance bit to clean burner ports.
6. Drill out blocked ports using the supplied drill bit in a small cordless drill: this can be done with the burner attached to the grill, but it's easier if removed from the grill.
7. Do not flex the drill bit when drilling the ports because the drill bit will break.
8. This drill bit is for burner ports NOT for brass orifices that regulate the gas flow to the burner.
9. Do not enlarge the holes
10. Ensure the insect screen is clean, tight, and free of any lint or other debris.
11. Reverse the procedure to reinstall the burner.
12. Ensure the valve enters the burner when installing.
13. Replace sear plate mount and tighten screws to complete re-installation.

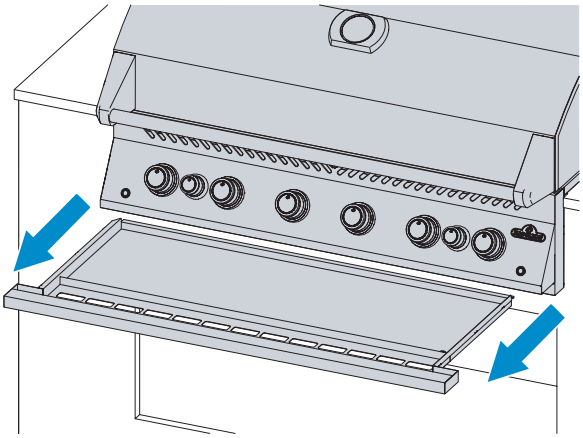

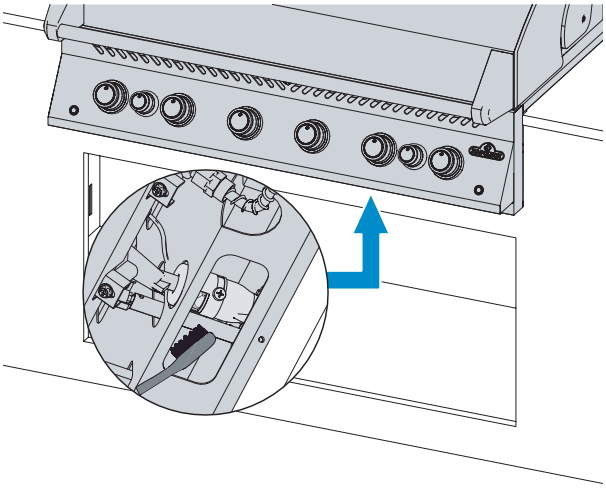

SAFETY FIRST!

Always wear protective gloves and safety glasses when servicing your grill.

WARNING! It is very important the valve/orifice enters the burner tube when reinstalling the burner after cleaning and before lighting your grill, or a fire or explosion could occur.

WARNING! Avoid unprotected contact with hot surfaces.

WARNING! Do not use abrasive cleaners or steel wool on any painted, porcelain, or stainless steel parts of your grill because it will scratch the finish.

Maintenance Instructions

RECOMMENDATIONS

This grill should be thoroughly inspected and serviced annually by a qualified service person.

- Do not obstruct the flow of ventilation and combustion air.
- Keep the cylinder enclosure ventilation openings located on the side of the cart or enclosure and front and back of the bottom shelf clear from debris.

WARNING! Keep the grill away from combustible materials, gasoline, and other flammable vapors and liquids.

Combustion in air adjustment

IMPORTANT! This must be done by a qualified gas installer.

- The air shutter is factory set and should not require adjusting under normal conditions. Adjustments might be required under extreme field conditions.
- The flames of the air shutter will be dark blue, tipped with light blue and occasionally yellow when adjusted correctly.
- Too little air flow to the burner will produce soot and lazy yellow flames.
- Too much air flow to the burner will cause flames to lift erratically and cause igniting difficulties.

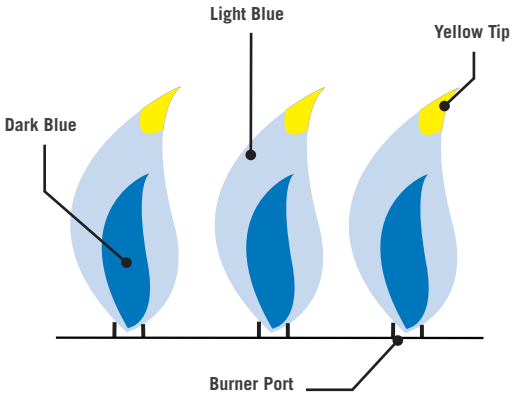

Adjusting the Air Shutter

1. Remove cooking grids and sear plates. Leave lid open.
2. You may have to open the cabinet door or remove the top drawer (if equipped) to access the air shutter screw located at the mouth of the burner.
3. Remove the back cover to adjust rear tube burner air shutter.
4. Loosen air shutter lock screw and open or close air shutter as required. (Fig. 1)
5. Light the burners on high.
6. Visually inspect burner flames.
7. Turn burners off, tighten locking screws, and replace removed parts when shutters are set correctly.
8. Ensure insect screens are installed.

Note: Infrared burners have no air adjustment.

Model		Orifice Size		Air Shutter	
		Main Burner	Rear Burner	Main Burner	Rear Burner
BIG32RB-1	Propane	#60	1.25mm	1/2"	Full
	Natural gas	1.45mm	#50	3/8"	Full
BIG38RB-1	Propane	#60	1.25mm	1/2"	Full
	Natural gas	1.45mm	#50	3/8"	Full
BIG44RB-1	Propane	#60	1.25mm	1/2"	Full
	Natural gas	1.45mm	#50	3/8"	Full
BI32	Propane	#60	-	-	-
	Natural gas	1.45mm	-	-	-
BIB10RT / BI10RT	Propane	#64	-	-	-
	Natural gas	#55	-	-	-
BIB10IR	Propane	#64	-	-	-
	Natural gas	1.27mm	-	-	-
BIB12RT / BI12RT	Propane	1.2mm	-	-	-
	Natural gas	1.7mm	-	-	-
BIB18RT	Propane	1.2mm	-	-	-
	Natural gas	1.7mm	-	-	-
BIB18IR	Propane	1.15mm	-	-	-
	Natural gas	#52	-	-	-
BIB18PB (outer ring)	Propane	1.75mm	-	-	-
	Natural gas	2.4mm	-	-	-
BIB18PB (inner ring)	Propane	1.4mm	-	-	-
	Natural gas	2.05mm	-	-	-

Fig. 1

Stainless in harsh environments

Stainless steel oxidizes or stains in the presence of chlorides and sulfides, especially in coastal regions, warm and highly humid areas, and around pools and hot tubs. These stains look like rust, but they can be easily removed or prevented. Wash stainless and chrome surfaces every 3-4 weeks. Clean with warm soapy water.

Burner Maintenance

- Extreme heat and a corrosive environment can cause surface corrosion to occur even though the burner is made from heavy wall 304 stainless steel.

Maintenance and Protection of Infrared Burners

Your infrared burners are designed to provide a long service life, but you must be careful to prevent cracking of their ceramic surfaces. Fractures will cause the burners to malfunction.

IMPORTANT! Damage resulting from by failure to follow these instructions is NOT covered by your grill warranty.

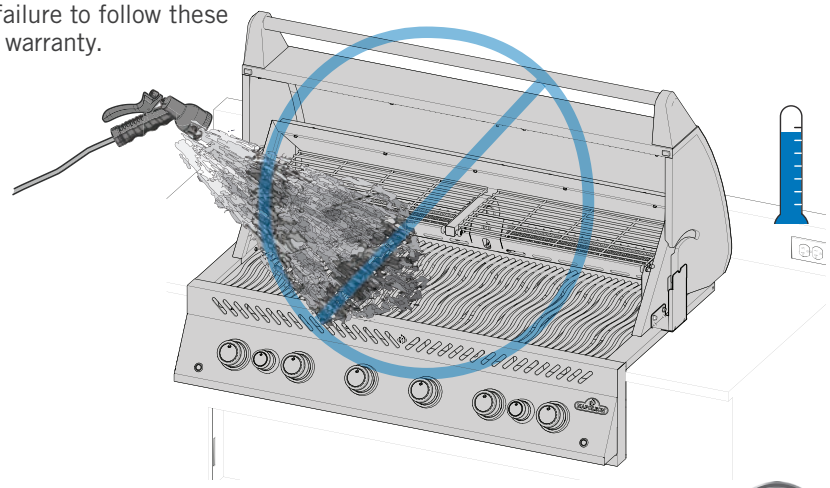

Replacing Oven Halogen Bulbs (if equipped)

- Remove the screw securing the housing in place.
- Snap the lens and metal bracket out of the housing.
- Wearing protective gloves, gently pull the old bulb from the socket and replace with the new bulb.
- Reinstall the lens into the housing and bend the tabs on the front back into position.

Steps to Avoid Damaging Ceramic Surfaces

1. Never douse a flame or control flare-ups with water.
2. Do not allow cold water (rain, sprinkler, hose etc.) to come in contact with hot ceramic burners. An immediate change in temperature will cause cracking of the ceramic tile.
3. A ceramic burner that becomes wet before use will create steam when operated later and produce pressure that will crack the ceramic.
4. Repeated soaking of the ceramic can cause it to swell and expand producing pressure that will make the ceramic crack and crumble.
5. Inspect the ceramic for possible water soaking if you find standing water in the grill. Remove the burner if the ceramic is wet. Turn it upside down to drain the excess water. Bring ceramic indoors to dry thoroughly.
6. Do not allow hard objects to impact the burner. Take care when inserting or removing cooking grids and using accessories.

Clearance Ventilation of hot air

- Hot air must have a way to escape the grill for the burners to function properly.
- The burners can become deprived of oxygen if the hot air is not allowed to escape causing them to back-flash. The ceramic can crack if this occurs repeatedly.

WE WANT TO HELP!

Contact the Napoleon Customer Solutions Department for recommended replacement parts. 1-866-820-8686.

SAFETY FIRST!

Never cover more than 75% of any main or side burner cooking surface with any solid metal (e.g. griddles or pans)

WARNING! Turn off gas at the source and disconnect the unit before servicing.
WARNING! Maintenance should only be done when the grill is cool to avoid the possibility of burns.
WARNING! A leak test must be performed annually and when any component of the gas train is replaced, or when the smell of gas is present.

Troubleshooting

Lighting Problems

- Main, rear or side burners will not light with the igniter, but will light with a match.
- Burners will not cross light each other.

	Possible causes	Solution
Main Burner	JETFIRE™ outlet is dirty or clogged	Clean JETFIRE™ outlet with a soft bristle brush.
	Dirty or corroded cross light brackets.	Clean or replace as required.
Rear and Side Burners	Dead battery, or installed incorrectly.	Replace with premium heavy- duty battery.
	Loose electrode wire or switch terminal wires.	Check electrode wire is firmly pushed onto the terminal on the back of the igniter. Check the lead wires from the module to the ignition switch (if equipped) are firmly pushed onto their respective terminals.
	Lifting flames on burner.	Close air shutter according to "**Maintenance Instructions"- Combustion Air Adjustment** section in this Owner's Manual. **IMPORTANT**! This must be done by a qualified gas installer.

Noises and Flare-ups

- Humming regulator.
- Excessive flare-ups and uneven heat.

Possible causes	Solution
Normal humming noise on hot days.	This isn't a defect. It's caused by internal vibrations in the regulator and doesn't affect the performance or safety of the grill. Humming regulators WILL NOT be replaced.
The cylinder valve was opened too quickly.	Open cylinder valve slowly
Sear plates installed incorrectly.	Ensure sear plates are installed with holes towards the front, and the slots on the bottom. See Assembly Instructions Guide.
Improper heating.	Preheat grill with all main burners on high for 10 to 15 minutes.
Excessive grease and ash build on sear plates and in drip pan.	Clean sear plates and drip pan regularly. Do not line pan with aluminum foil. Refer to **"Cleaning Instructions".**





Illumination Problems

- Oven Halogen Bulbs not working.
- Control Panel lights not working.

Possible causes	Solution
Unit is not connected to power	Plug power cord (from working GFI protected outlet) into electrical box on the back of the grill. Plug transformer cord into power box.
Blown fuse	Replace fuse located on outlet line of transformer.
Faulty transformer	Check transformer output – should be 12VAC. Replace if required.
Terminal on switch or circuit board are corroded or loose	Clean connections and ensure connectors are pushed together firmly. Access to circuit board is under electrical cover on left side of cabinet.
Halogen bulbs blown (oven lights only)	Replace bulbs as per the instructions in the "**Maintenance Instructions"- Replacing Oven Halogen Bulbs** section of this Owner's Manual

Gas Flow

- Low heat or low flame when valve is turned to high.
- Burners burn with yellow flame, accompanied by the smell of gas.
- Flames lift away from burner, accompanied by the smell of gas, and possible lighting difficulties.
- Burner output on HIGH, but setting is LOW. Rumbling noise and fluttering blue flame at burner surface.

Possible causes	Solution
Propane – improper lighting procedure	Ensure lighting procedure is followed carefully. All gas valves must be in the OFF position when the tank valve is turned on. Turn tank on slowly to allow pressure to equalize. See Operation – **"Lighting Instructions".**
Natural gas – undersized supply line.	Pipe must be sized according to installation code.
Leaking gasket surrounding the ceramic tile, or a weld failure in the burner housing.	Allow burner to cool and inspect very closely for cracks. Contact your authorized Napoleon dealer to order replacement burner assembly if any cracks are found.
Both gas propane and natural gas – improper preheating.	Preheat grill with both main burners on high for 10 to 15 minutes.
Possible spider web or other debris.	Thoroughly clean nest or webs out of your burner orifice by removing it and following instructions in this manual. See **"Leak Test".**
Improper air shutter adjustment.	Open or close air shutter slightly according to this manual. See **"Maintenance Instructions".** **IMPORTANT**! This must be done by a qualified gas installer.
Lack of gas	Check gas level in propane cylinder.
Supply hose is pinched.	Reposition supply hose as necessary.
Propane regulator in low flow state.	Turn the burners off and close the tank valve, wait 5 minutes before fully re-opening the valve, allow a few seconds for the pressure to equalize before following the Lighting Instructions to start the grill. Ensure igniting procedure is followed carefully every time you cook. All gas valves must be OFF when the tank valve is turned on. Always open the tank valve slowly.

Infrared Burner Flashes Back

- During operation the burner abruptly makes a loud whoosh sound, followed by a continuous blow-torch type sound and grows dim or has a large flame on start up.

Possible causes	Solution
Ceramic tiles overloaded with grease drippings and build-up. Ports are clogged	Turner burner OFF and allow to cool for at least 2 minutes. Reignite burner and burn on HIGH for at least 5 minutes, or until the ceramic tiles are evenly glowing red.
Burner overheated because inadequate ventilation. Too much grill surface covered by griddle or pan.	Ensure no more than 75% of the grill surface is covered by objects or accessories. Turn burner OFF and allow to cool for at least 2 minutes. Reignite.
Leaking gasket surrounding the ceramic tile, or a weld failure in the burner housing.	Allow burner to cool and inspect very closely for cracks. Contact your authorized Napoleon dealer to order replacement burner assembly if any cracks are found.
Improper heating.	Preheat grill with both main burners on high for 10 to 15 minutes.
Excessive grease and ash build on sear plates and in drip pan.	Clean sear plates and drip pan regularly. Do not line pan with aluminum foil. Refer to **"Cleaning Instructions".**

Peeling Paint

- Paint appears to be peeling inside lid or hood.

Possible causes	Solution
Grease build-up on inside surfaces.	This is not a defect. The finish on the lid and hood is porcelain or stainless steel and will not peel. The peeling is caused by hardened grease, which dries into paint-like shards, that flake off. Regular cleaning will prevent this. See **"Cleaning instructions".**

Diagram for Electrical Connections

BIG44RB-1, BIG38RB-1, BIG32RB-1

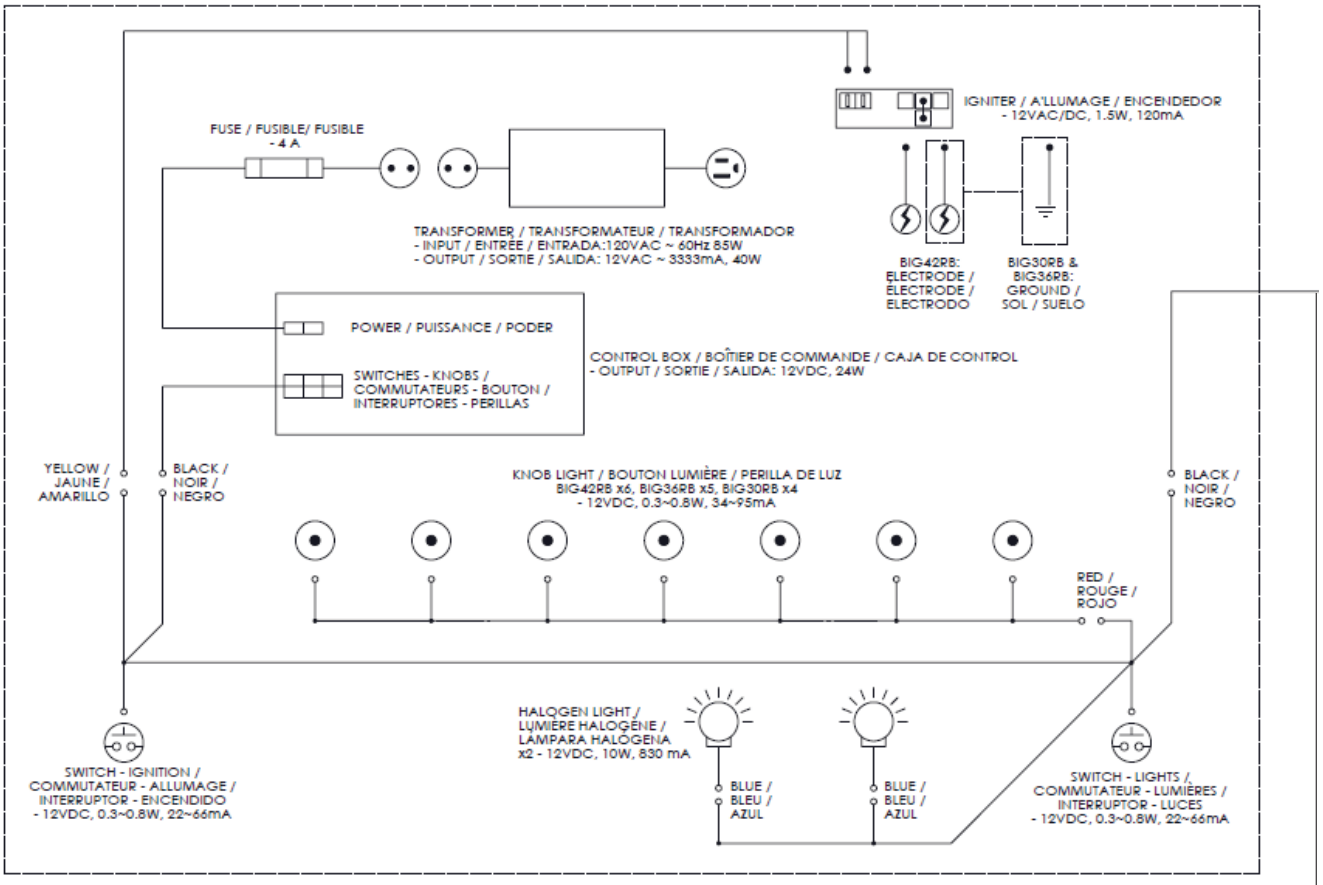

BIB18, BIB12, BIB10

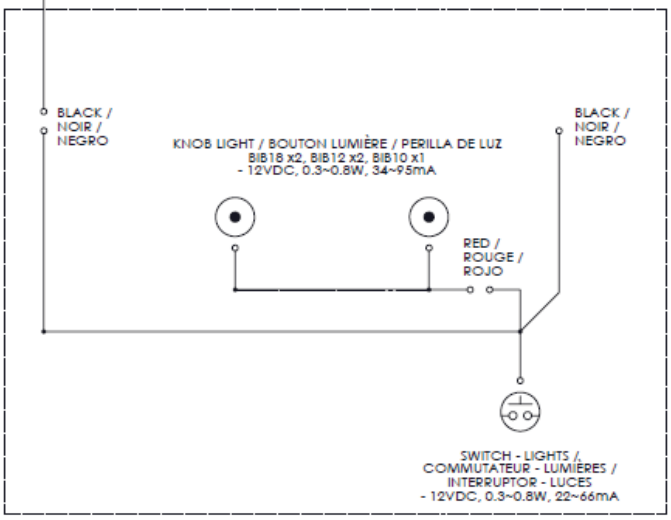

NAPOLEON LIMITED LIFETIME WARRANTY

FOR PRESTIGE®, PRESTIGE PRO™ AND BUILT-IN SERIES MODELS



Napoleon products are designed with superior components and materials and are assembled by trained craftsmen who take great pride in their work. The burner and valve assembly are leak tested and test-fired at a quality test station. This grill has been thoroughly inspected by a qualified technician before packaging and shipping to ensure that you, the customer, receive the quality product you expect from Napoleon. Thank you for purchasing a Napoleon product. Napoleon (Wolf Steel Ltd, Barrie, ON, Canada) warrants that the components in your new Napoleon product will be free from defects in material and workmanship from the date of purchase, for a period of 15 years.

Hood	Lifetime
Stainless Steel Lid	Lifetime
Porcelain Enamel Lid	Lifetime
Aluminum Castings	Lifetime
Stainless Steel Cooking Grids	Lifetime
Stainless Steel Tube Burners	Lifetime
Stainless Steel Sear Plates	15 Years
Porcelain Enamel Cast Iron Grids	15 Years
Stainless Steel Infrared Rotisserie	15 Years
Infrared Bottom/Side Burner	15 Years
All Other Parts	15 Years

CONDITIONS AND LIMITATIONS:

This Limited Warranty creates a warranty period as specified in the aforementioned table, for products purchased through an authorized Napoleon dealer, and entitles the original purchaser (or gift recipient in the case where a new product is given as a gift) to the specified coverage in respect of any component replaced within the warranty period, either by Napoleon or an authorized Napoleon dealer, to replace a component of such product that has failed in normal private use as a result of a manufacturing defect. This warranty does not cover accessories or bonus items.

For greater certainty, “normal private use” of a product means that the product: has been installed (where applicable) by a licensed, authorized service technician or contractor, in accordance with the installation instructions included with the product and all local and national building and fire codes; has been properly cleaned and maintained according the to the instructions; and has not been used as a communal amenity or in a commercial application. In the case of use in communal or commercial applications (where approved), the warranty is reduced to a period of two (2) years.

Similarly, “failure” does not include: damage caused by over-firing, blow outs caused by environmental conditions such as strong winds or inadequate ventilation, scratches, dents, corrosion, deterioration of painted and plated finishes, discoloration caused by heat, abrasive or chemical cleaners or UV exposure, chipping of porcelain enameled parts, or damages caused by misuse, accident, hail, grease fires, lack of cleaning and maintenance, hostile environments such as salt or chlorine, alterations, abuse, neglect or parts installed from other manufacturers. If you live in a coastal area, or have your product located near a pool or hot tub, maintenance includes regular washing and rinsing of the exterior surfaces as outlined in the accompanying owner’s manual, in order to prevent surface corrosion. Should deterioration of parts occur to the degree of non-performance (rusted through or burnt through) within the duration of the warranted coverage, a replacement part will be provided. Parts replaced under this warranty are warranted only for the balance of the period specified in the aforementioned table.

The replacement component is the sole responsibility of Napoleon defined by this warranty; in no event will Napoleon be responsible for installation, labor or any other costs or expenses related to the re-installation of a warranted part, for any incidental, consequential or indirect damages, or for any handling and transportation charges or export duties.

NAPOLEON LIMITED LIFETIME WARRANTY

FOR PRESTIGE®, PRESTIGE PRO™ AND BUILT-IN SERIES MODELS

The use and/or installation of parts on your Napoleon product that are not genuine Napoleon parts will void this warranty, and any damages that result hereby are not covered by this warranty. Any conversion of a gas grill not authorized by Napoleon and performed by a Napoleon authorized service technician will void this warranty.

This warranty is provided in addition to any rights afforded to you by local laws. These and other statutory rights remain unaffected by this warranty provision. Accordingly, this warranty imposes no obligation upon Napoleon to keep parts in stock. Based on the availability of parts, Napoleon may at its discretion discharge all obligations by providing a customer a prorated credit towards a new product. Napoleon may from time to time update the design of its products. Nothing contained in this warranty shall be construed as obligating Napoleon to incorporate such design updates into previously manufactured products, nor shall such updates be construed as an admission that previous designs were defective.

Registering your Napoleon product confirms your warranty coverage, will expedite any warranty claims you may need to make, and provides a link between you and Napoleon in case we ever need to contact you. When making warranty claims, Napoleon representatives may request from you the bill of sale or copy, together with a serial number and a model number. Napoleon reserves the right to have its representative inspect any product or part prior to honoring any warranty claim. You must contact Napoleon Customer Service or an authorized Napoleon dealer to obtain the benefit of the warranty coverage.